3D STEREO Disdrometer

Instruction for Use

5.4120.xx.xxx

Dok. No. 021849/10/19

THE WORLD OF WEATHER DATA

Safety Instructions

- Before operating with or at the device/product, read through the operating instructions.
  This manual contains instructions which should be followed on mounting, start-up, and operation.
  A non-observance might cause:
  - failure of important functions
  - endangerment of persons by electrical or mechanical effect
  - damage to objects
- Mounting, electrical connection and wiring of the device/product must be carried out only by a qualified technician who is familiar with and observes the engineering regulations, provisions and standards applicable in each case.
- Repairs and maintenance may only be carried out by trained staff or **Adolf Thies GmbH & Co. KG**. Only components and spare parts supplied and/or recommended by **Adolf Thies GmbH & Co. KG** should be used for repairs.
- Electrical devices/products must be mounted and wired only in a voltage-free state.
- **Adolf Thies GmbH & Co KG** guarantees proper functioning of the device/products provided that no modifications have been made to the mechanics, electronics or software, and that the following points are observed:
- All information, warnings and instructions for use included in these operating instructions must be taken into account and observed as this is essential to ensure trouble-free operation and a safe condition of the measuring system / device / product.
- The device / product is designed for a specific application as described in these operating instructions.
- The device / product should be operated with the accessories and consumables supplied and/or recommended by **Adolf Thies GmbH & Co KG.**
- Recommendation: As it is possible that each measuring system / device / product may, under certain conditions, and in rare cases, may also output erroneous measuring values, it is recommended using redundant systems with plausibility checks for **security-relevant applications**.
- Infrared LED light source: IEC 62471:2006,modified EN 62471:2008 Lamp classification exempt group tested by VDE

GPL Code Statement

The software included in this device / product contains copyrighted software that is licensed under the GNU General Public License (“GPL”) or GNU Lesser General Public License (“LGPL”). For details see Page **Error! Bookmark not defined.**.

Environment

- As a longstanding manufacturer of sensors Adolf Thies GmbH & Co KG is committed to the objectives of environmental protection and is therefore willing to take back all supplied products governed by the provisions of "*ElektroG*" (German Electrical and Electronic Equipment Act) and to perform environmentally compatible disposal and recycling. We are prepared to take back all Thies products concerned free of charge if returned to Thies by our customers carriage-paid.

- Make sure you retain packaging for storage or transport of products. Should packaging however no longer be required, please arrange for recycling as the packaging materials are designed to be recycled.

Documentation

- © Copyright **Adolf Thies GmbH & Co KG**, Göttingen / Germany
- Although these operating instruction has been drawn up with due care, **Adolf Thies GmbH & Co KG** can accept no liability whatsoever for any technical and typographical errors or omissions in this document that might remain.
- We can accept no liability whatsoever for any losses arising from the information contained in this document.
- Subject to modification in terms of content.
- The device / product should not be passed on without the/these operating instructions.

Explanation of Symbols

- Warning for hot surface

Contents

Figure

Table

Scope of delivery

- **Instruction for use**

1 Models available

Designation	Order number	Equipments
3D STEREO DISDROMETER	5.4120.00.000	24 V AC/DC 125 W
3D STEREO DISDROMETER	5.4120.01.000	24 V AC/DC 250 W
3D STEREO DISDROMETER	5.4120.10.000	85...264 V AC 125 W
3D STEREO DISDROMETER	5.4120.11.000	85...264 V AC 250 W

Table 1: Available models.

2 General

The 3D Disdrometer measures all kinds of particles such as drizzle, rain, snow, hail and mixed precipitation. Furthermore, it is also able to identify non-hydrometeors. Due to its three-dimensional particle detection ability, it will show a reduced error under windy conditions.

The acquisition comprises the types of precipitation, intensity, and size-speed-distribution. All measuring values are available for the user via Ethernet, RS485 interface and files on SD card.

The camera module housing is equipped with an integrated heating. Instruments are equipped with the temperature sensor. In addition, the „optional measuring channels" will be able to connect relative humidity, wind speed, and wind direction sensors. These values will also be available via the RS485 interface and Ethernet connection.

For sites with rough climates, a version with "extended heating" is also available.

The instrument is especially suited for application in the fields of

- Meteorology
- Climatology
- Regenerative energy, wind power plants
- Traffic engineering, aviation, and navigation
- Hydrology

3 Mode of operation of the 3D disdrometer

The instrument consists of a light source and a stereo camera. Particles pass through the measurement volume (see Figure 1) defined by the viewing angles of the cameras as well as minimum and maximum distance from the cameras.

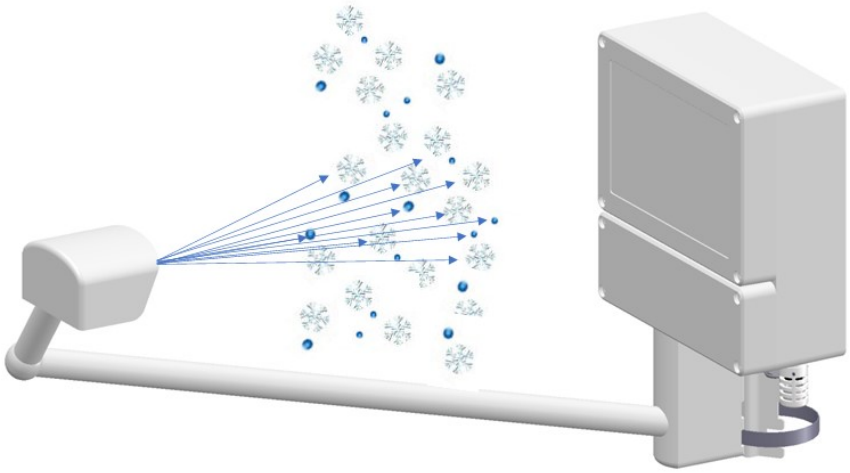

Figure 1: Explanation of the measuring principle.

All particles cause extinction of the light seen by the cameras. Particle sizes are deduced from the area seen by the cameras and their position within the measurement volume. Particle speeds are deduced from the movement of the particle during a predefined time. Furthermore, the characteristics of the particle image allow the system to distinguish between rain, snow, hail, graupel, seeds, and insects.

The calculated data are memorized over one minute, and then transmitted via serial interface, Ethernet (TCP/IP connection, up to 5 clients at a time) or store on the SD card as a file.

The type of precipitation is determined from the statistic proportion of all articles referring to diameter and velocity. These proportions have been tested scientifically (e.g. Gunn, R., and Kinzer, G.D., 1949, “The terminal velocity of fall for water droplets in stagnant air.” J. of Meteorology, Vol. 6, pp. 243-248). In addition, the temperature is included in order to improve the identification.

The instrument is almost maintenance-free. Only the glasses of camera module head and LED pane should be cleaned, if necessary. For application in areas of extreme weather conditions (for example high mountains), we recommend a model with “extended heating”. By using a flash-memory the internal software can be updated any time via Ethernet connection.

Various ways for data output:

- Ethernet
- RS485
- Stored on an internal SD card

4 Installation

4.1 Installation site requirements

Depending on the wind speed and wind direction the precipitation particles are swirled by the 3D Disdrometer so that the fall speed is changed. This might cause a deterioration of the sensor quality. Therefore, you should avoid installation in the open country (particularly mountain tops) or directly in the lee of an obstacle. Well-suited is flat locations with windbreaks (e.g. hedges).

According to the WMO-directive for precipitation measuring instruments the distance between the installed sensors and the next obstacle should be at least four times the height of this obstacle.

If this is not practicable, at least keep an azimuth angle of < 45° with regard to the surrounding plants, buildings, etc. Logically consistent would be also to mount the sensor on a mast top. We recommend a measuring height of at least 1 m or rather 1.5 to 2 m in snowy sites.

Other devices (except optical IR sensors, see next paragraph) should be mounted with a distance of at least 1 m on the same mast. The side distance to other objects should be greater than 2 m.

This sensor emits a pulsed IR radiation (850nm, 50Hz) which can influence other optical IR sensors. We, therefore, recommend NOT TO USE an APPROPRIATE SENSOR in the transmission lobe up to about 10 meters. Likewise, interference outside the transmitting lobe due to indirect reflections can occur.

It is not advisable to install the 3D Disdrometer directly on a street, because it is, for example, possible that water particles, whirled up by the vehicles, might lead to erroneous measurements. In this case, we recommend installing the instrument with a respective distance and height.

4.2 Mechanical Installation

4.2.1 Mounting on Mast

The delivered mast holder of the 3D Disdrometer is designed for a mast diameter of 48... 102 mm (1.9... 4 inches). The mast should be electro-conductive and be connected to the ground potential (foundation/grounding bound). Otherwise, the sensor is to be connected to the ground potential by a cable with a minimum of 6mm² diameter.

Remark: For models with supply 115 VAC / 230 VAC

The mast should be electro-conductive and be connected with the ground potential (base/ground strip). Apart from that, the sensor is to be connected to the ground potential by means of a cable (> 6mm²).

4.2.2 Mounting Angle

First, the mounting angle should be fastened at the mast. Because of the shading effect of the mast, the angle should be mounted at the highest possible place. Align the angle to the north acc. to **Figure 3** (± 1°, Northern hemisphere), and fasten it at the top of the mast. It is advisable to have a second person holding the Disdrometer during the mounting.

Does only apply to the models with supply 115 VAC / 230 VAC:

In case an electro-conductive mast is used, the straps should be fastened directly, i.e. without insulator. If the mast is not electro-conductive, a potential equalization should be established between ambiance (for ex. fundament) and sensor by means of a cable (> 6 mm²).

1. Cut 2 pieces of the necessary length of the strap (1 meter) acc. to the table below.

   Note: The cut surfaces could after cutting have sharp edges. Risk of injury.

2. Insert the strap into the housing from the screw head side, and bend a projection of 20 mm over the ridge (**Figure 2**).
3. Put the free end of the prepared clamp around the mast and the mounting angle, and screw it on (**Figure 3**).
4. 2 Straps are provided for each mounting angle.

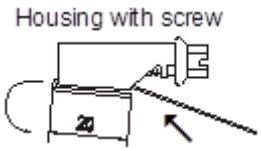

Figure 2: Strap housing.

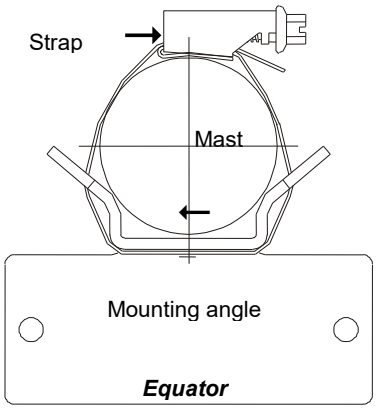

Figure 3: Strap, Mast, Mounting angle.

Mast Ø	Mast Ø	Length strap
48 mm	1.9 inch	250 mm (10 inch)
60 mm	2.4 inch	310 mm (12.2 inch)
80 mm	3.2 inch	370 mm (14.6 inch)
90 mm	3.5 inch	400 mm (15.8 inch)
102 mm	4 inch	440 mm (17.3 inch)

4.3 Electrical Installation

Attention:

The instrument must be mounted and wired only by a qualified expert, who knows and observes the generalities of technics, and applicable regulations and norms.

4.3.1 Electrical installation with cable glands

In order to carry out an EMC-compatible installation the cable screen/shielding (except the supply cable, which, in general, is not shielded) is to be connected to the contact spring of the screwed cable gland (**Figure 4**).

1 With the Standard Contacting (see Figure 4.1)

- Strip back the outer sheath and screen (shielding)
- Make a round cut in the outer sheath approx. 15 mm long but do not remove the sheath
- Guide the cable through the cable gland
- Pull off the outer sheath
- Pull back the cable until the connection is made between the cable screen and contact spring
- Turn shut… and it is ready for use!

2 With thin Wires without an Inner Sheath (see Figure 4.2)

- Strip back the outer sheath
- Pull back the screen braid approx. 15-20 mm over the outer sheath
- Insert the cables into the cable gland until the contact is made between the cable screen and contact spring
- Turn shut ….and it is ready for use!

3 When Routing the Cable Screen to another Connection (see Figure 4.3)

- Expose the screen braid approx. 10 mm
- Guide the cable through the cable gland until the connection is made between the cable screen and contact spring
- Turn shut…and it is ready for use!

-

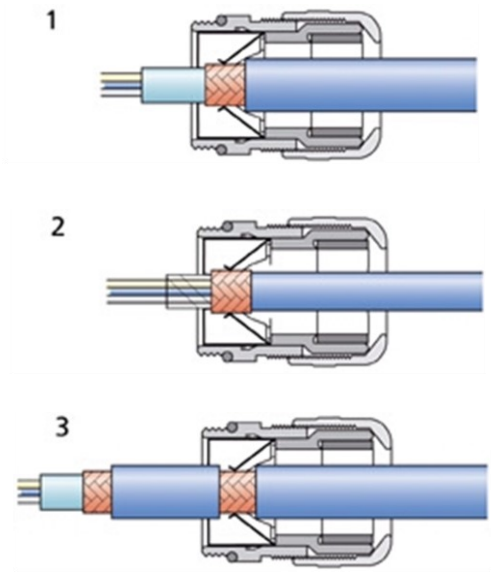

Figure 4: Screen cable connection to the cable gland

After all connections have been established the supply can be switched on.

NOTE:
All supply voltages must be potential-free (exception 115 / 230 VAC). For example, with the 24 VAC power supply there must be used a separate winding of the transformer only for this sensor. In addition, we recommend to provide for a separator in the installation (for example switch or fuse), and to mark this.

When the instrument operates properly the cover should be fastened and the instrument can be configured now.

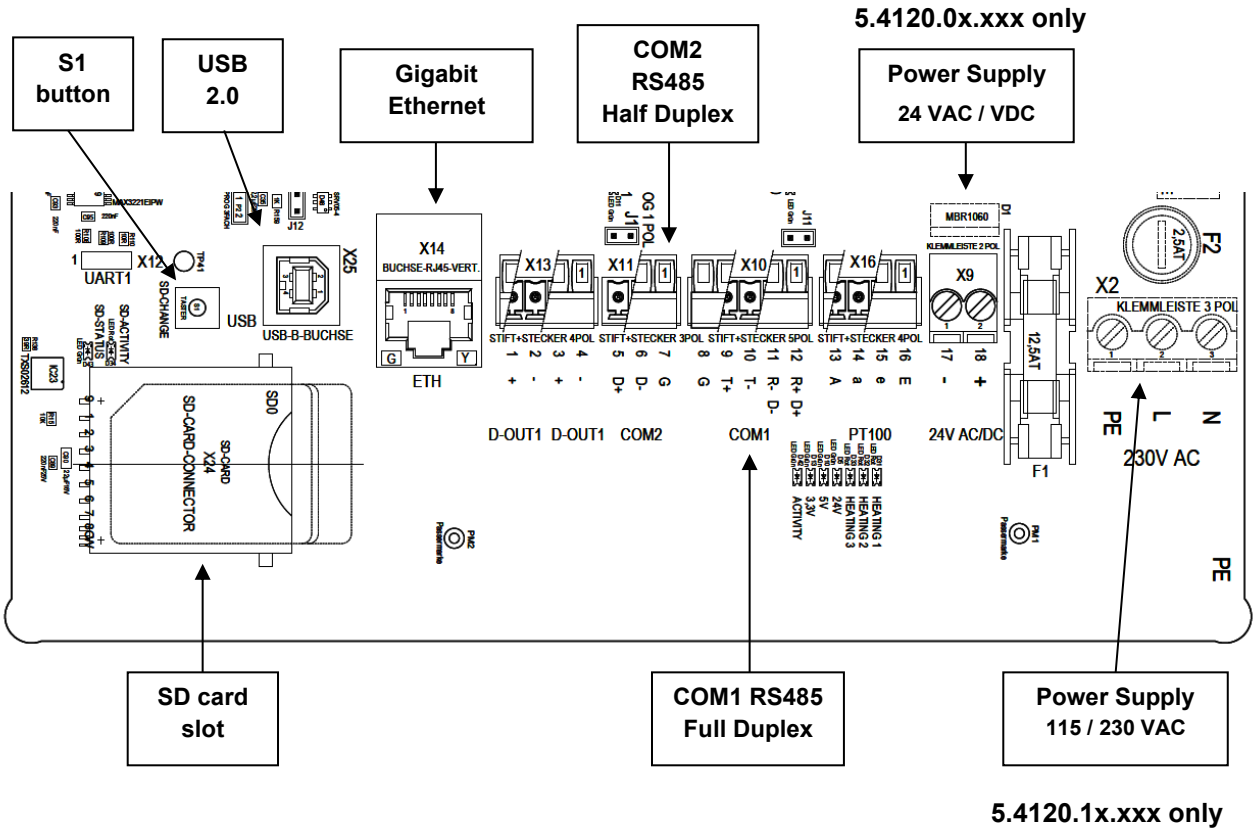

Figure 5: Interface diagram.

4.3.2 Ethernet connection

An Ethernet connection is available at the 3D-disdrometer for the communication. In Figure 5, shown the connector (Gigabit Ethernet), where the user can plug a LAN cable.

4.3.3 Serial communication

A RS485 interfaces (4-wire (COM1) or 2-wire (COM2)) with several baud rates (command “BR” or “BS”, see Section 6.4) and frame formats (command “SF” or “SG”, see Section 6.4) are available at the 3D-disdrometer for serial communication.

To connect the 3D-Disdrometer to a PC we recommend a RS485/USB converter 9.1702.40.002. The pinout table and connection diagram are shown in Section 4.3.3.1 and Section 4.3.3.2.

4.3.3.1 RS485 Full duplex connection

See Figure 5 for pin numbers.

Pin Number	Pin Type	Description	
8	Ground	G	Signal ground
9	Output	T+	Transmit Data
10	Output	T-	Transmit Data

11	Input	R+	Receive Data
12	Input	R-	Receive Data

Table 2: RS-485 full-duplex mode pinout.

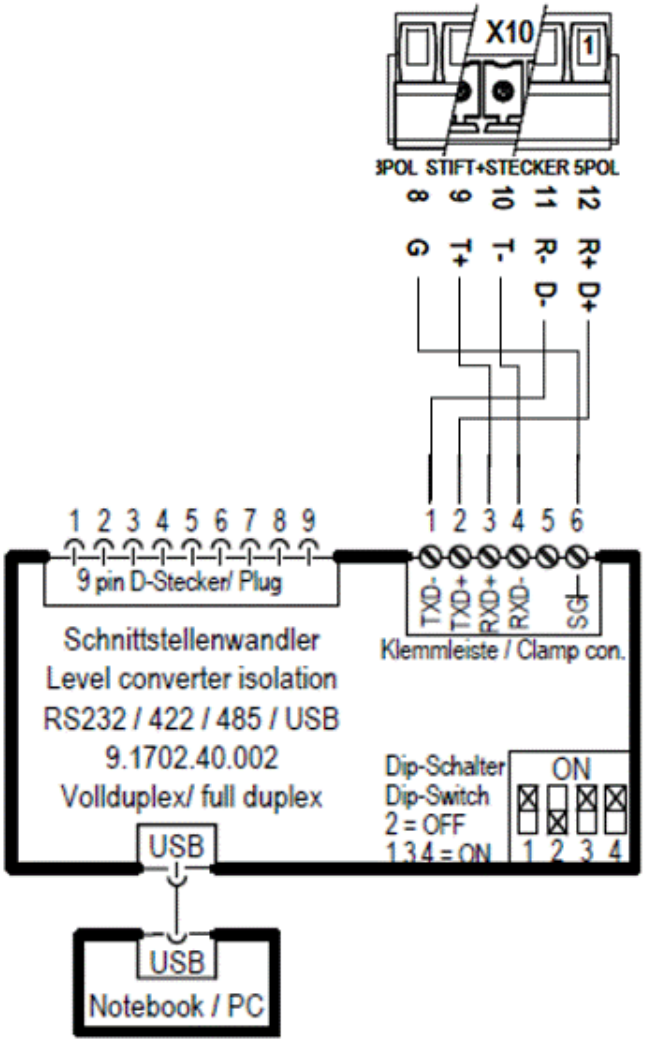

Figure 6: RS-485 full-duplex mode connection diagram with RS485/USB converter 9.1702.40.002.

4.3.3.2 RS485 Half duplex connection

See Figure 5 for pin numbers.

Pin Number	Pin Type	Description	
5	Ground	G	Signal ground
6	Output/Input	D-	Transmit/Receive Data
7	Output/Input	D+	Transmit/Receive Data

Table 3: RS-485 half-duplex mode pinout.

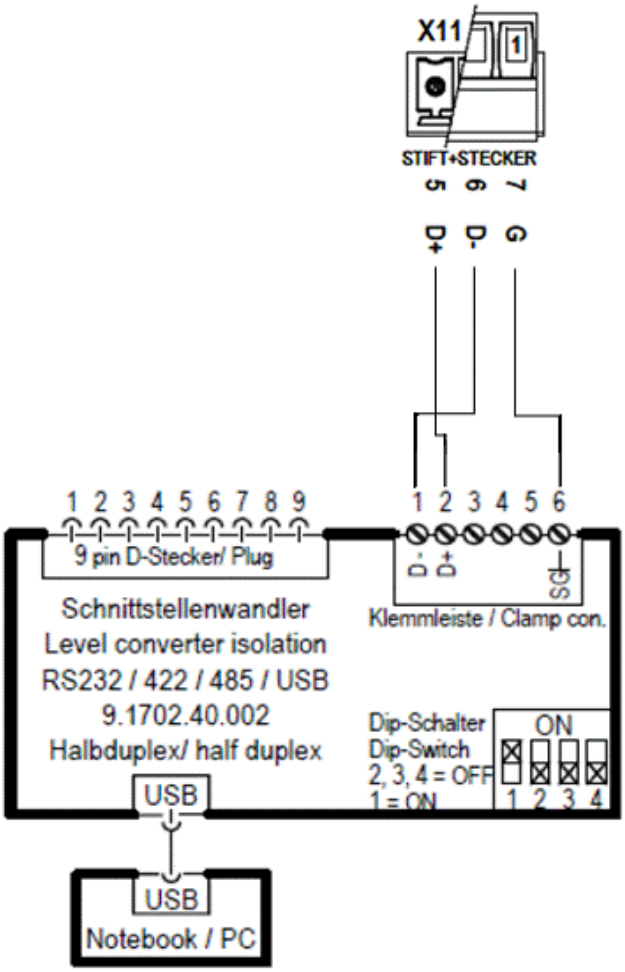

Figure 7: RS-485 half-duplex mode connection diagram with RS485/USB converter 9.1702.40.002.

5 Operation

The system is pre-configured for plug-and-play use. It is equipped with a variety of interfaces like Ethernet, RS485, and a SD card slot. The measured data can be stored on the SD card or transmitted via the serial interfaces or via Ethernet. With the delivered device, the SD card will be already present in the SD card slot. Upon delivery, the user must follow the step described in **Section 5.1.**

NOTE:
The device does not store the data without SD-card.

5.1 Connect to the system

The system has an embedded Linux running. The system can be accessed by the user with Secure Shell (SSH), Secure Copy (SCP), or Secure File Transfer Protocol (SFTP). The Linux command line terminal can be accessed with a SSH connection. The default network settings for the Ethernet connection are preconfigured at the factory and can be changed via commands by the setup user (see Section 6.4).

Default (factory) Ethernet network setting :

- IP address: 10.0.0.2
- IP netmask: 255.255.255.0

Before starting the device, it must be connected to the local network.

Once the device is connected to the local network, the user can access the system with SSH, SFTP, SCP or Telnet. For this purpose, there are clients like WinSCP or PuTTY freely available.

There is one login account pre-configured for accesses by the setup user. The setup user is like an administrator with restricted access to configure the system at the customer site. The setup user can additionally create other user accounts with restricted access (see Section 5.3). The predefined setup user account is:

Login: setup

Password: YucQ7RRe

The password can and should be changed by the setup user itself (see Section 5.2).

After the 3D-disdrometer is embedded in the network, please change IP-address into a standard address via serial communication or via Ethernet (TCP/IP communication). You will receive a standard IP-address from your network administrator. This is necessary so that the device is accessible always at the same IP-address. Followinf sections define how to the IP-address.

Set up network TCP/IP connection

Upon delivery, “DHCP” is disabled in the 3D disdrometer.

Please start the terminal program, for example, TeraTerm, and select the TCP/IP interface. The communication parameter (IP-address and port number) are previously assigned by the user (if the device is connected for the first time, select IP-address: 10.0.0.2 and port number: 4950).

If it is not possible to connect the device via default settings, please connect it via serial interface (COM1 or COM2). To connect via serial interface, the following section (Setup network via Serial interface) will provide the information.

The setting of the ethernet interface can be changed via the command <id>IP_DHCP<para>, <id>IP_ADDR<para>, <id>IP_SNM<para> and <id>IP_GW<para>.

Below shown two examples to change the network settings.

Example 1: to set DHCP OFF and to use manual settings

00KY00001	=> User access mode
00IP_DHCP0	=> Disable DHCP
00IP_ADDR192.168.7.123	=> Assign IP address
00IP_SNM255.255.255.0	=> Assign IP subnet mask
00IP_GW192.168.2.1	=> Assign IP Getway
00KY00000	=> Store parameter
00RS00002	=> reboot the system

Example 2: to set DHCP ON and to use IP assigned by DHCP server (Before setting the DHCP ON, please ask to your system administration).

00KY00001	=> User access mode
00IP_DHCP1	=> Enable DHCP
00KY00000	=> Store parameter
00RS00002	=> reboot the system

Remark:

The IP setting can be changed only when the DHCP service is switched off.

The IP address, IP mask and IP Getway must in every case be correctly set for the net used.

You can ask your system administrator for the IP address, the IP mask and the IP Gateway address. With other connections to the Ethernet e.g. via routers, you can define the settings based on the manual for the router and its settings.

The addresses must be set on the device via a serial interface or via ethernet. For details on the settings via commands, see Section 6.4.

Setup network via Serial interface

To use serial interface, please make connection described in Section 4.3.3.

Please start a terminal program, for example, TeraTerm, and select the serial interface. The communication parameter (baudrate and frame format) are previously assigned by the user (if the device is connected for the first time, select baudrate: 9600 and frame format: 8 data bits. 1 stop bit).

The setting of the ethernet interface can be changed via same command s described in previous section (Set up network TCP/IP connection).

5.2 Set setup password

To change the predefined password ("YucQ7RRe") for setup, two files have to be changed after login (see Section 5.1):

1. Open the file "/media/setup/start_user.sh" for editing.
2. Write the call for change of password in one line:

   "/media/setup/change_setup_passwd.sh"
3. Save the file
4. Open the file "/media/setup/ change_setup_passwd.sh" for editing.
5. Change the password for setup. Example for new password "123456":

```
# Change setup password, call from start_user.sh

# passwd << EOF

# <old password>

# <new password>

# <new password>

# EOF

#

passwd << EOF

YucQ7RRe

123456

123456

EOF
```

6. Save the file
7. Reboot the system (see section 5.5)

Then it takes about 30 seconds for the system to reboot.

5.3 Manage user and/or group accounts

Here are the steps to create new user and groups after login (see Section 5.1):

1. Group: Open the group configuration file “/media/setup/grouplist.conf” for editing, for example with “vi” text editor
2. User: Open the user configuration file “/media/setup/userlist.conf” for editing, for example with “vi” text editor
3. Save the file(s)
4. Reboot the system (see Section 5.5)

Then it takes about 30 seconds for the system to reboot.

5.4 Set system time

The system time can be set via RS485 and Ethernet: use commands “ZY”, “ZN”, “ZD”, “ZH”, “ZM” and “ZS” (see Section 6.4).

5.5 System Reboot

The system can be reboot via 2 possible ways.

1. RS485 and Ethernet: use command “<id>RS00002” (see Section 6.4)
2. S1 button (see Figure 5): by pressing button S1 for more than 5 and less than 10 seconds.

Then it takes about 30 seconds for the system to reboot.

5.6 System Shutdown/Poweroff

The system can be power off by 2 possible ways.

1. RS485 and Ethernet: use command “<id>RS00001” (see Section 6.4)
2. S1 button (see Figure 5): by pressing button S1 for more than 10 seconds.

Then it takes about 30 seconds for the system to shut down.

5.7 Updating the 3D Disdrometer

There are two kinds of updates:

1. Update of the operating system
2. Update of the program and system settings

For both kinds of updates, the update file will be delivered as an installation package file named “install_package.tar.gz” and “install_package.tar.gz.md5” by THIES. The user has to copy

these files to “/media/setup/upload/” via SFTP or SCP connection with the user name and password (see Section 5.1).

Once the installation files are copied to destination folder, the user must have to reboot the system by sending the command “<id>RS00002” (see Section 6.4 form more details) via serial interface or via TCP/IP connection. The system will take about 10 minutes to update the system.

> **Important:**
> ***Please do NOT abort this process or power off the system until the update has finished! Otherwise, the system is destroyed and makes a repair necessary!***

5.8 SD card interface

The SD card is used to store measurement data (telegrams). The following file systems for the SD card are accepted by the device:

- FAT32
- ext2

The system automatically mounts the SD card and starts the measurement software as a background process. The user can select the wish telegram setting via Serial communication or via Ethernet by sending command “<id>TP<para>” (see Section 6.4).

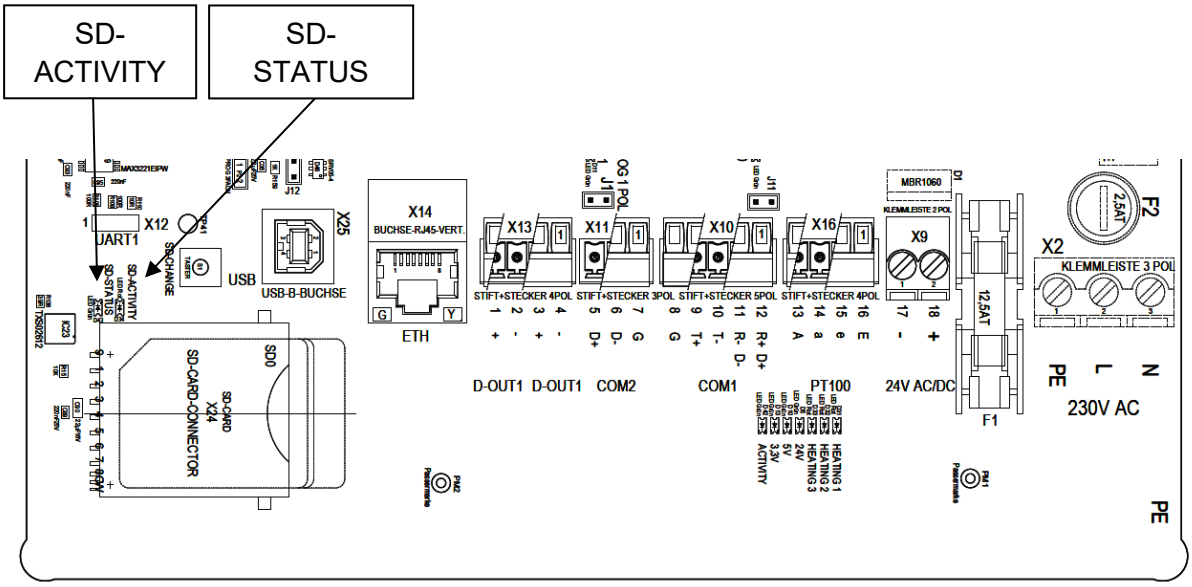

Figure 8: SD card activity.

The status of the SD card interface is indicated by two LEDs on the board, next to the SD card slot (see Figure 8). The red LED (named SD-ACTIVITY) blinks when the system accesses the SD card. The green LED (named SD-STATUS) is active when a valid SD card was detected and is in use by the system.

NOTE:
WHEN THE SD-STATUS LED IS ON (USE BY THE SYSTEM) THE SD CARD SHOULD NOT BE REMOVED! THE STEPS TO SAFELY REMOVE A SD CARD IS DESCRIBED BELOW.

When the system starts it checks if a valid SD card is inside the slot. If a SD card is inside, it will be activated and the SD-STATUS LED lights up. If not, the LED will be dark. In both cases, the measurement process will start normally. If configured correctly, measurement data will be stored on the SD card if present.

If no SD card is present, the data is lost but this is NOT handled by the system as an error condition. It is possible to insert or remove a SD card when the system is running. The insertion is strait forward. When the system detects an SD card with a supported file system (FAT or ext2), it will be automatically mounted and used by the system. Then the SD-STATUS LED light up.

When an active SD card should be removed, it must be deactivated by an ejection request. To do so, press the button SD-CHANGE near the SD card slot (see Figure 5) until the SD-STATUS LED starts blinking fast. Then release the button. The LED starts to blink slower and the system waits until the SD card is removed. Then the LED turns off. All other (not SD card based) measurements will continue.

5.9 Configuration of 3D-Disdrometer by customer

The 3D-Disdro is factory-set before delivery to the customer.

- This is described in the supplementary sheet with the factory settings “Werkseinstellung).

The customer can alter the factory settings of the 3D-Disdrometer or adapt them to new requirements.

The 3D-Disdrometer can be configured via serial interface or via Ethernet (TCP/IP connection) using communication commands. The communication commands are described briefly in Section 6.4.

Recommendation:
After performing configuration please amend the supplementary sheet for the factory settings and send in to the manufacturer when the device is returned for servicing or repair.

6 Communication

6.1 Serial communication

See Section 4.3.3 for connection diagram.

The communication can be carried out, for example, by means of a standard terminal program and a PC.

NOTE:
If the user has changed the serial communication parameter settings (i.e., baud rate and frame format), then the user has to use the last modified serial communication parameter settings.

6.2 Ethernet connection

See Section 4.3.3 for connection diagram.

The communication can be carried out, for example, by means of TeraTerm.

NOTE:
If the user has changed the network settings (i.e. IP-address and port number), then the user has to use the last modified network settings.

6.3 General telegram format

A fixed telegram format is used for the communication (<CR> means Carriage Return (enter key)):

- Data request:

  “<id>BB<CR>” <CR> means carriage return (enter key)

- Change of parameters:

  “<id>BBppppp<CR>” <CR> means carriage return (enter key)

The single letters have the following meanings:

Id:	Device address number (00…99, initial value 00)
BB:	Tow-digit command code (case-insensitive)
ppppp:	A new parameter is set by entering a 5-digit value. The parameter is right-aligned, and must be completed with zeros from the left.

Example for a Change of Parameter:

The baud rate for COM1 is to be set to 4 (corresponds to 4800baud) with the device address “00”. The respective command is:

“00BR0004<CR>”

Example data request:

The set record for the baud rate is returned with the command

“00BR<CR>”

Reply:

“!00BR00004”

The reply from the sensor is marked by an exclamation mark at the beginning of the return.

NOTE:
The receiving buffer of sensor can be cleared by sending a carriage return <CR>.
In case the sensor has invalid or unintentional characters in the receiving buffer, it is advisable to send <CR> at the beginning of the command, e.g. “<CR>00BR<0CR>”.

Error messages from the sensor	
“<id>CI00002”	Unknown command
“<id>CI00004”	Parameter out of allowed range
“<id>CI00008”	Incorrect command mode (see comand “KY”, see Section 6.4)

6.4 List of Commands

Command		Description	Password	
			Read	Write
Command BR	<id>BR<para5>	Setting/Getting the baud rate for COM1.	0	1
Command BS	<id>BS<para5>	Setting/Getting the baud rate for COM2.	0	1
Command DC	<id>DC	Copy configuration file from system to SD card.	0	1
Command DD	<id>DD	Request of the diagnostic data.	0	-
Command DX	<id>DX	Requesting source of error, warning resp. condition of the device.	0	-
Command EP	<id>EP<para5>	Setting the port number for TCP/IP communication.	0	1
Command EC	<id>EC	Getting the information about	0	-

		about the TCP/IP connected clients.		
Command HT	<id>HT<para5>	Switch on heating for 1 min (tube)	0	1
Command HL	<id>HL<para5>	Switch on heating for 1 min (LED cover)	0	1
Command HH	<id>HH<para5>	Switch on heating for 1 min (LED housing)	0	1
Command ID	<id>ID<para5>	Device address.	0	1
Command IP_ADDR	<id>IP_ADDR<para>	IP address	0	1
Command IP_DHCP	<id>IP_DHCP<para5>	Switch DHCP on/off	0	1
Command IP_GW	<id>IP_GW<para>	IP Getway	0	1
Command IP_SNM	<id>IP_SNM<para>	IP Subnet mask	0	1
Command KY	<id>KY<para5>	Access key.	0	0
Command RS	<id>RS<para5>	System shutdown/reboot.	0	0
Command SC	<id>SC<para5>	Setting/Getting the number of diameter classes.	0	1
Command SD	<id>SD<para5>	Setting/Getting the diameter doubling index delta.	0	1
Command SF	<id>SF<para5>	Setting/Getting the frame format for COM1.	0	1
Command SG	<id>SG<para5>	Setting/Getting the frame format for COM2.	0	1
Command SI	<id>SI<para5>	Setting/Getting the diameter start class index.	0	1
Command SN	<id>SN	Request of the serial number.	0	-
Command SV	<id>SV	Request of the software version.	0	-
Command SW	<id>SW<para5>	Setting/Getting the diameter start class width.	0	1
Command TA	<id>TA<para5>	Thies order number.	0	-
Command TM	<id>TM<para5>	Autonomous telegram output (COM1).	0	1

Command TN	<id>TN<para5>	Autonomous telegram output (COM2).	0	1
Command TP	<id>TP<para5>	Autonomous telegram output (FILE).	0	1
Command TQ	<id>TQ<para5>	Autonomous telegram output (TCP/IP).	0	1
Command TR	<id>TR<para5>	Telegram Request.	0	-
Command TS	<id>TS<para5>	Telegram string separator.	0	1
Command UC	<id>UC	Apply the system configuration from SD card to the system.	0	1
Command VC	<id>VC<para5>	Setting/Getting the number of velocity classes.	0	1
Command VD	<id>VD<para5>	Setting/Getting the velocity doubling index delta.	0	1
Command VI	<id>VI<para5>	Setting/Getting the velocity start class index.	0	1
Command VW	<id>VW<para5>	Setting/Getting the velocity start class width.	0	1
Command ZD	<id>ZD<para5>	Setting the System clock (day).	0	1
Command ZH	<id>ZH<para5>	Setting the System clock (hour).	0	1
Command ZM	<id>ZM<para5>	Setting the System clock (minute).	0	1
Command ZN	<id>ZN<para5>	Setting the System clock (month).	0	1
Command ZS	<id>ZS<para5>	Setting the System clock (second).	0	1
Command ZT	<id>ZT	Request of sensor date and clock.	0	-
Command ZY	<id>ZY<para5>	Setting the System clock (year).	0	1

Table 4: Command list

0: Normal mode (See command “KY”).

1: Configuration mode (See command “KY”).

‘-‘: user can only request the information.

6.4.1 Commands and description

Command BR

<id>BR<para5> Command for setting/getting the baud rate for **COM1**.

Description: The communication can be carried out with different baud rate. The setting range is from 1200baud to 115.2kbaud.

The following parameters are defined for BR.

Parameter description:

Parameter	Alternative	Description
12	2	1200baud
24	3	2400baud
48	4	4800baud
96	5	9600baud
192	6	19200baud
384	7	38400baud
576	8	57600baud
1152	9	115200baud

Table 5: List of baud rates with telegram BR

If baud rate is changed, the device will return the value of the new baud rate selected in the baud rate set previously to show command acceptance.

When the baud rate is queried with command BR, the device returns the baud rate last programmed.

Example: 00BR

!00BR00005

Value range: 2-9

Initial value: 5 (Set in the factory)

Command BS

<id>BS<para5> Command for setting/getting the baud rate for **COM2**.

Description: The communication can be carried out with different baud rate. The setting range is from 1200baud to 115.2kbaud.

The following parameters are defined for BS.

Parameter description:

Parameter	Alternative	Description
12	2	1200baud

24	3	2400baud
48	4	4800baud
96	5	9600baud
192	6	19200baud
384	7	38400baud
576	8	57600baud
1152	9	115200baud

Table 6: List of baud rates with telegram BS

If baud rate is changed, the device will return the value of the new baud rate selected in the baud rate set previously to show command acceptance.

When the baud rate is queried with command BS, the device returns the baud rate last programmed.

Example: 00BS

!00BS00005

Value range: 2-9

Initial value: 5 (Set in the factory)

Command DC

<id>DC Copy configuration file from system to SD card.

Description: The command will export the configuration file from the system to SD card.

Value range: -

Initial value: -

Command DD

<id>DD Request of the diagnostic data

Description:

Number	Description
1	DDH0
2	System Configuration version
3	MAIN: Hardware version
4	MAIN: Software version
5	MAIN: V1 [V] (24.0 V)
6	MAIN: V2 [V] (5.0 V)

7	MAIN: V3 [V] (3.3 V)
8	MAIN: Temperature Inside [°C]
9	MAIN: Temperature Outside [°C]
10	MAIN: Temperature SoC [°C]
11	MAIN: Pressure [Pa]
12	LED: Hardware version
13	LED: Firmware version
14	LED: V1 [V] (40.0 V)
15	LED: V2 [V] (12.0 V)
16	LED: V3 [V] (3.3 V)
17	LED: Temperature Board [°C]
18	LED: Temperature Cover [°C]
19	LED: Temperature Window [°C]
20	LED: Temperature setpoint cover [°C]
21	LED: Temperature setpoint window [°C]
22	LED: Control value cover heating [LSB]
23	LED: Control value window heating [LSB]
24	CAM: Hardware version
25	CAM: Firmware version
26	CAM: Temperature housing [°C]
27	CAM: Temperature setpoint [°C]
28	CAM: heating power [%]
29	CAM: max. heating power [%]
30	CAM: Control value housing heating [%]
31	CAM: Clean lens left [%]
32	CAM: Clean lens right [%]

Table 7: Requested data via command “DD”.

Example reply: “DDH0;3.1;VER-08-17-R5;1.11-rc1;24.2;05.0;03.3;38.7;29.5;000.0;00000.0 ;VER-07-17-R5;02.09;40.6;11.3;03.2;47.4;47.5;36.4;99.9;99.9;99.9;99.9;VER-07-16-R1;01.08;39.7;05.0;10.0;30.0;05.1;997;997”

1. DDH0 identifier
2. v3.1 System Configuration version
3. VER-08-17-R5 MAIN: Hardware version
4. 1.11-rc1 MAIN: Software version
5. 24.2 V MAIN: V1 [V]
6. 05.0 V MAIN: V2 [V]

7. 03.3 V	MAIN: V3 [V]
8. 38.7 °C	MAIN: Temperature Inside [°C]
9. 29.5 °C	MAIN: Temperature Outside [°C]
10. 000.0 °C	MAIN: Temperature SoC [°C]
11. 00000.0 Pa	MAIN: Pressure [Pa]
12. VER-07-17-R5	LED: Hardware version
13. v02.09	LED: Firmware version
14. 40.6 V	LED: V1 [V]
15. 11.3 V	LED: V2 [V]
16. 03.2 V	LED: V3 [V]
17. 47.4 °C	LED: Temperature Board [°C]
18. 47.5 °C	LED: Temperature Cover [°C]
19. 36.4 °C	LED: Temperature Window [°C]
20. 99.9 °C	LED: Temperature setpoint cover [°C]
21. 99.9 °C	LED: Temperature setpoint window [°C]
22. 99.9 LSB	LED: Control value cover heating [LSB]
23. 99.9 LSB	LED: Control value window heating [LSB]
24. VER-07-16-R1	CAM: Hardware version
25. v01.08	CAM: Firmware version
26. 39.7 °C	CAM: Temperature housing [°C]
27. 05.0 °C	CAM: Temperature setpoint [°C]
28. 10.0 %	CAM: heating power [%]
29. 30.0 %	CAM: max. heating power [%]
30. 05.1 %	CAM: Control value housing heating [%]
31. 99.7 %	CAM: Clean lens left [%]
32. 99.7 %	CAM: Clean lens right [%]

Value range: -

Initial value: -

Command DX

<id>DX Requesting source of error, warning resp. condition of the device.

Description: When an error or a warning has been detected the reason can be requested by means of this command.

“1”: error / warning

“0”: no error / warning

Number	Description
1	DEH0
2	MAIN: V1 out of the permissible range (permissible range: 18-40 V) (OK:0, Error:1)
3	MAIN: V2 out of the permissible range (permissible range: 4.9-5.1 V) (OK:0, Error:1)
4	MAIN: V3 out of the permissible range (permissible range: 3.2-3.4 V) (OK:0, Error:1)

5	LED: V1 out of the permissible range (OK:0, Error:1)
6	LED: V2 out of the permissible range (OK:0, Error:1)
7	LED: V3 out of the permissible range (OK:0, Error:1)
8	LED: Temperature of board to high (>55°C) (OK:0, Error:1)
9	LED: Communication Fail 1 (Timeout) (OK:0, Error:1)
10	LED: Communication Fail 2 (Checksum) (OK:0, Error:1)
11	LED: Temperature sensor cover not in order (OK:0, Error:1)
12	LED: IR-LEDs not in order (OK:0, Error:1)
13	CAM: Temperature sensor not in order (OK:0, Error:1)
14	CAM: housing temperature > 80 ° C (OK:0, Error:1)
15	CAM: camera sensor failure (OK:0, Error:1)
16	CAM: Communication Fail 1 (Timeout) (OK:0, Error:1)
17	CAM: Communication Fail 2 (Checksum) (OK:0, Error:1)
18	DWH0
19	MAIN: Temperature SoC to high (> 90° C) (OK:0, Warning:1)
20	MAIN: Pressure sensor not in order (OK:0, Warning:1)
21	LED: Temperature sensor board not in order (OK:0, Warning:1)
22	CAM: housing temperature > 50° C (OK:0, Warning:1)

Table 8: Requested data via command “DX”.

Example reply:

“DEH0;0;0;0;0;0;0;0;0;0;1;1;0;0;0;0;0;DWH0;0;0;0;0”

Value range: -

Initial value: -

Command EP

<id>EP<para5> Setting the port number for TCP/IP communication.

Description: Setting the TCP/IP communication port.

	Once the TCP/IP communication port number is changed, reboot the system using command ““<id>RS2”.
Value range:	1024…65535
Initial value:	4950

Command EC

<id>EC	Command for getting the information about the TCP/IP connected clients.
Description:	Getting the TCP/IP connected client’s information.
Value range:	-
Initial value:	-

Command HT

<id>HT<para5>	Switch on/off tube heating.
Description:	with this command the heating circuit can be switched on for testing purpose (Only for the Extended heating equipped device). After one minute the heating circuit id switched off automatically. With the parameter 0 the heating circuit can be switched off immediately.
Value range:	0…255
Initial value:	-

Command HL

<id>HL<para5>	Switch on/off LED cover heating.
Description:	with this command the heating circuit can be switched on for testing purpose (Only for the Extended heating equipped device). After one minute the heating circuit id switched off automatically. With the parameter 0 the heating circuit can be switched off immediately.
Value range:	0…70
Initial value:	-

Command HH

<id>HH<para5>	Switch on/off LED housing heating.
Description:	with this command the heating circuit can be switched on for testing purpose (Only for the Extended heating equipped device). After one minute the heating circuit id switched off automatically. With the parameter 0 the heating circuit can be switched off immediately.
Value range:	0…255
Initial value:	-

Command ID

<id>ID<para5> Setting for the device address for the communication.

Description: After setting of the address in the future this new <id> must be used for each new command.

Value range: 0…99

Initial value: 0

Command IP_ADDR

<id>IP_ADDR<para> IP address.

Description: Setting the IP address with the command ”IP_ADDR” of the device.

Prameter description: AAA.BBB.CCC.DDD

AAA Byte0 (hi-byte)

BBB Byte1

CCC Byte2

DDD Byte3 (lo-byte)

Example:

00IP_ADDR192.168.1.2

Value range: 0…4294967295 (in 4-byte notation)

Initial value: 0

Command IP_DHCP

<id>IP_DHCP<para5> Switch DHCP on/off

Description: The command “IP_DHCP” determines if the IP address is requested automatically by the DHCP server or is used the fixed address.

0: IP-settings of preset values

1: IP-settings will be assign by DHCP server

Value range: 0, 1

Initial value: 0

Command IP_GW

<id>IP_GW<para> IP Getway.

Description: Setting the IP Getway with the command ”IP_GW” of the device.

Prameter description: AAA.BBB.CCC.DDD

AAA Byte0 (hi-byte)

BBB Byte1

CCC Byte2

DDD Byte3 (lo-byte)

Example:

00IP_GW192.168.2.4

Value range: 0…4294967295 (in 4-byte notation)

Initial value: 0

Command IP_SNM

<id>IP_SNM<para> IP subnet mask.

Description: Setting the IP subnet mask with the command ”IP_SNM” of the device.

Prameter description: AAA.BBB.CCC.DDD

AAA Byte0 (hi-byte)

BBB Byte1

CCC Byte2

DDD Byte3 (lo-byte)

Example:

00IP_SNM255.255.255.0

Value range: 0…4294967295 (in 4-byte notation)

Initial value: 0

Command KY

<id>KY<para5> Setting the command mode (0: Read, 1: Write).

Description: With command “KY”, the value is set for the key (password). To change parameters, the necessary password must be set.

- 0 : no password
- 1 : password for user level

Example: To set baud rate for COM1

<id>KY00001 => set mode to user level

<id>BR00006 => set baud rate to 19200baud

<id>KY00000 => set mode to no password

The user must have to set command mode from 1 (user level) to 0 (no password) after changing the parameters, otherwise parameter will not be stored.

Value range: 0, 1

Initial value: 0 (set to zero by power up, no storing)

Command RS

<id>RS<para5> Command for system shutting down or rebooting.

Description: Shut down the system via sending the command: 00RS1.

Reboot the system via sending the command: 00RS2.

Rest value will give the command response.

Value range: 1-2

Initial value: -

Command SC

<id>SC<para5> Command for setting/getting the number of diameter classes.

Description: For setting the number of diameter classes = 24, the command: 00SC24.

(For more details, see *16 in Section 6.5.1).

Value range: 2-63

Initial value: 22 (Set in the factory)

Command SD

<id>SD<para5> Command for setting/getting the diameter doubling index delta.

Description: For setting the diameter doubling index delta = 6, the command: 00SD6.

(For more details, see *16 in Section 6.5.1).

Value range: Positive value

Initial value: 5 (Set in the factory)

Command SF

<id>SF<para5> Command for setting/getting the frame format for **COM1**.

Description: The communication can be carried out with different baud rate and parities. The following parameters are defined for SF.

Parameter description:

Parameter	Frame Format	Description
0	8N1	8 Databits, no Parity, 1 Stopbit
1	8N2	8 Databits, no Parity, 2 Stopbits
2	8E1	8 Databits, even Parity, 1 Stopbit
3	8E2	8 Databits, even Parity, 2 Stopbits
4	8O1	8 Databits, odd Parity, 1 Stopbit

5	8O2	8 Databits, odd Parity, 2 Stopbits
10	7N1	7 Databits, no Parity, 1 Stopbit
11	7N2	7 Databits, no Parity, 2 Stopbits
12	7E1	7 Databits, even Parity, 1 Stopbit
13	7E2	7 Databits, even Parity, 2 Stopbits
14	7O1	7 Databits, odd Parity, 1 Stopbit
15	7O2	7 Databits, odd Parity, 2 Stopbits

Table 9: List of Frame Formats with telegram SF.

Value range: 0-5, 10-11

Initial value: 0 (Set in the factory)

Command SG

<id>SG<para5> Command for setting/getting the frame format for **COM2**.

Description: The communication can be carried out with different baud rate and parities. The following parameters are defined for SF.

Parameter description:

Parameter	Frame Format	Description
0	8N1	8 Databits, no Parity, 1 Stopbit
1	8N2	8 Databits, no Parity, 2 Stopbits
2	8E1	8 Databits, even Parity, 1 Stopbit
3	8E2	8 Databits, even Parity, 2 Stopbits
4	8O1	8 Databits, odd Parity, 1 Stopbit
5	8O2	8 Databits, odd Parity, 2 Stopbits
10	7N1	7 Databits, no Parity, 1 Stopbit
11	7N2	7 Databits, no Parity, 2 Stopbits
12	7E1	7 Databits, even Parity, 1 Stopbit
13	7E2	7 Databits, even Parity, 2 Stopbits
14	7O1	7 Databits, odd Parity, 1 Stopbit
15	7O2	7 Databits, odd Parity, 2 Stopbits

Table 10: List of Frame Formats with telegram SG.

Value range: 0-5, 10-11

Initial value: 0 (Set in the factory)

Command SI

<id>SI<para5>	Command for setting/getting the diameter start class index.
Description:	For setting the diameter start class index = 1, the command: 00SI1.
	(For more details, see *16 in Section Section 6.5.1).
Value range:	Positive value
Initial value:	0 (Set in the factory)

Command SN

<id>SV	Request of the serial number.
Description:	Output of the serial number.
Value range:	-
Initial value:	-

Command SV

<id>SV	Request of the software version.
Description:	Output of the software version (example reply: “!00SV0098” -> 0.98).
Value range:	-
Initial value:	-

Command SW

<id>SW<para5>	Command for setting/getting the diameter start class width.
Description:	For setting the diameter start class width = 1, the command: 00SW1.
	(For more details, see *16 in Section Section 6.5.1).
Value range:	Positive value
Initial value:	1 (Set in the factory)

Command TA

<id>TA<para5>	Command for getting device article number.
Description:	For upper two parts, the command: 00TA1.
	For lower two parts, the command: 00TA2.
	Rest value will give the command response.
Value range:	1-2
Initial value:	-

Command TM

<id>TM<para5>	For COM1, Telegram selection measuring data (automatically send without request, automatic mode).
Description:	Setting the telegram, telegram 5, 100 to 163 (see Section 6.5.1). Telegram 5 is for LNM compatible telegram. Telegram 100 to 163 are TDD telegram. Telegram 0 means no automatic sending, and is recommended when using the polling command “TR”.
Value range:	0, 5, 100…163
Initial value:	163

Command TN

<id>TN<para5>	For COM2, Telegram selection measuring data (automatically send without request, automatic mode).
Description:	Setting the telegram, telegram 5, 100 to 163 (see Section 6.5.1). Telegram 5 is for LNM compatible telegram. Telegram 100 to 163 are TDD telegram. Telegram 0 means no automatic sending, and is recommended when using the polling command “TR”.
Value range:	0, 5, 100…163
Initial value:	163

Command TP

<id>TP<para5>	For FILE, Telegram selection measuring data (automatically send without request, automatic mode).
Description:	Setting the telegram, telegram 5, 100 to 163. Telegram 5 is for LNM compatible telegram. Telegram 100 to 163 are TDD telegram. Telegram 0 means no automatic sending, and is recommended when using the polling command “TR”.
Value range:	0, 5, 100…163
Initial value:	163

Command TQ

<id>TQ<para5>	For TCP/IP, Telegram selection measuring data (automatically send without request, automatic mode).
Description:	Setting the telegram, telegram 5, 100 to 163.

	Telegram 5 is for LNM compatible telegram. Telegram 100 to 163 are TDD telegram. Telegram 0 means no automatic sending, and is recommended when using the polling command “TR”.
Value range:	0, 5, 100…163
Initial value:	163

Command TR

<id>TR<para5>	Command for requesting a telegram (polling mode).
Description:	Request of telegrams 5 and 100 to 163. If you want to get the data by polling, you should switch off the automatic mode with command “<id>TM00000”.
Value range:	5, 100…163
Initial value:	-

Command TS

<id>TA<para5>	Command for setting the TDD Telegram string separator.
Description:	For Space separator, the command: 00TS1. For Comma separator, the command: 00TS2. For Semicolon separator, the command: 00TS3.
Value range:	1-3
Initial value:	3

Command UC

<id>UC	Apply the system configuration from SD card to the system.
Description:	The command will apply the system configuration from SD card to the system and reboot the system once it configured. NOTE: In this case, configuration file will be provided by THIES and the user need to copy this configuration file to SD card before using “UC” command.
Value range:	-
Initial value:	-

Command VC

<id>VC<para5>	Command for setting/getting the number of velocity classes.
Description:	For setting the number of velocity classes = 24, the command: 00VC24.

	(For more details, see *16 in Section 6.5.1).
Value range:	2-63
Initial value:	20 (Set in the factory)

Command VD

<id>VD<para5>	Command for setting/getting the velocity doubling index delta.
Description:	For setting the velocity doubling index delta = 6, the command: 00VD6.
	(For more details, see *16 in Section 6.5.1).
Value range:	Positive value
Initial value:	4 (Set in the factory)

Command VI

<id>VI<para5>	Command for setting/getting the velocity start class index.
Description:	For setting the velocity start class index = 1, the command: 00VI1.
	(For more details, see *16 in Section 6.5.1).
Value range:	Positive value
Initial value:	0 (Set in the factory)

Command VW

<id>VW<para5>	Command for setting/getting the velocity start class width.
Description:	For setting the velocity start class width = 1, the command: 00VW1.
	(For more details, see *16 in Section 6.5.1).
Value range:	Positive value
Initial value:	2 (Set in the factory)

Command ZD

<id>ZD<para5>	Setting the System clock (day).
Description:	Setting the day. The sensor time can be requested by the command “ZT”.
Value range:	1…31
Initial value:	-

Command ZH

<id>ZH<para5>	Setting the System clock (hour).

Description:	Setting the hour. The sensor time can be requested by the command “ZT”.
Value range:	0…23
Initial value:	-

Command ZM

<id>ZM<para5>	Setting the System clock (minute).
Description:	Setting the minute. The sensor time can be requested by the command “ZT”.
Value range:	0…59
Initial value:	-

Command ZN

<id>ZN<para5>	Setting the System clock (month).
Description:	Setting the month. The sensor time can be requested by the command “ZT”.
Value range:	1…12
Initial value:	-

Command ZS

<id>ZS<para5>	Setting the System clock (second).
Description:	Setting the second. The sensor time can be requested by the command “ZT”.
Value range:	0…59
Initial value:	-

Command ZT

<id>ZT	Request of sensor date and clock.
Description:	Output of the sensor date and time. Format: “TT.MM.JJ;HH:mm:SS” (example: “30.07.20;12:00:00”)
Value range:	-
Initial value:	-

Command ZY

<id>ZY<para5>	Setting the System clock (year).

Description:	Setting the year. The sensor time can be requested by the command “ZT”.
Value range:	2019…9999
Initial value:	-

6.5 Data Telegrams

This telegram is stored as a file on SD card and/or transmitted every minute by the device (without the request of the receiver) via serial communication and/or Ethernet (TCP/IP), when the parameter “TM”, “TN”, “TP” or TQ (see Section 6.4) is set to 5 or in between 100 to 163. The request of the telegram (polling mode) is possible with the command “TR”.

6.5.1 TDD Telegram

The folder and name conventions are the following:

- Folder: /media/sd/YYYY/MM/DD/hh/
- File name: YYYYMMDDThhmmsstdd.dat
- T: separator

The data line format is the following:

- List separator: Semicolon (;), Coma (,), Space ( )
- Decimal separator: Point (.)
- Start of the telegram: “$3DD”(if the automatic mode is in between 100 to 163)
- End of the telegram: CR, FL
- Variable length telegram.
- Error code/data not available: Output of the greatest presentable number (e.g. “99.9”).

This telegram can be visualized with the LNM View software (9.1700.99.000). This can be accomplished in two ways:

- Offline: Import telegram files from SD card and convert it with LNM View File converter
- Online: Setup 3D Disdrometer as physical 3D-disdro device with serial or ethernet connection in LNM View software

For a detailed description of the necessary steps see the instructions for use of LNM View.

Example telegram **163**:

```
$3DD;1777;163;0052;0.9880;29.05.20;08:58:00;MES0;00;00;NP   ;999.998;00;00;
NP;000.000;0000.00;99999;99.9;997;0.0;1.000;00;000;0;00000;037;028;0000;0000;000;000;
000;000;0000;0000;0000;0000;0000;0000;0000;0000;0000;0000;DDH0;24.2;05.0;03.3;37.1;
27.9;000.0;00000.0;0;40.5;11.2;03.2;47.4;47.4;33.7;99.9;99.9;99.9;99.9;1;39.0;05.0;10.0;30.
0;05.4;997;997;1.000;0;03.629;DEH0;0;0;0;0;0;0;0;0;1;0;0;0;0;0;0;DWH0;0;0;0;0;DSD0;1;0
;5;22;2;0;4;20;0;0;0;0;0;0;0;0;0;0;0;0;0;0;0;0;0;0;0;0;0;0;0;0;0;0;0;0;0;0;0;0;0;0;0;0;0;0;0;0;0;0
```

```
;0;0;0;0;0;0;0;0;0;0;0;0;0;0;0;0;0;0;0;0;0;0;0;0;0;0;0;0;0;0;0;0;0;0;0;0;0;0;0;0;0;0;0;0;0;0;0;0;0;
0;0;0;0;0;0;0;0;0;0;0;0;0;0;0;0;0;0;0;0;0;0;0;0;0;0;0;0;0;0;0;0;0;0;0;0;0;0;0;0;0;0;0;0;0;0;0;0;0;
0;0;0;0;0;0;0;0;0;0;0;0;0;0;0;0;0;0;0;0;0;0;0;0;0;0;0;0;0;0;0;0;0;0;0;0;0;0;0;0;0;0;0;0;0;0;0;0;0;
0;0;0;0;0;0;0;0;0;0;0;0;0;0;0;0;0;0;0;0;0;0;0;0;0;0;0;0;0;0;0;0;0;0;0;0;0;0;0;0;0;0;0;0;0;0;0;0;0;
0;0;0;0;0;0;0;0;0;0;0;0;0;0;0;0;0;0;0;0;0;0;0;0;0;0;0;0;0;0;0;0;0;0;0;0;0;0;0;0;0;0;0;0;0;0;0;0;0;
0;0;0;0;0;0;0;0;0;0;0;0;0;0;0;0;0;0;0;0;0;0;0;0;0;0;0;0;0;0;0;0;0;0;0;0;0;0;0;0;0;0;0;0;0;0;0;0;0;
0;0;0;0;0;0;0;0;0;0;0;0;0;0;0;0;0;0;0;0;0;0;0;0;0;0;0;0;0;0;0;0;0;0;0;0;0;0;0;0;0;0;0;0;0;0;0;0;0;
0;0;0;0;0;0;0;0;0;0;0;0;0;0;0;0;0;0;0;0;0;0;0;0;0;0;0;0;0;0;0;0;0;0;0;0;0;0;0;0;0;0;0;0;0;0;0;0;0;
0;0;0;0;0;0;IMG0;04;DDF0;0000000;0000000;0000000;0000000;0016863;0023167;0019993;
0016868;0023173;0019999;0000000;0000000;0000000;0000000;0004716;0035077;001999
6;0004719;0035078;0019999;0000000;0000000;0000000;0014464;0040730;0019832;00147
03;0040789;0019999;0000000;0000000;0000000;0015132;0036830;0019985;0015137;0036
848;0019999;0000000;0000000;0000000;0000000;0014702;0040335;0019984;0014716;004
0346;0019999;0000000;0005393;0054660;0019997;0005397;0054662;0019999*45
```

No.	Len	Description TDD	
1	3	STX (3DD) (start identifier)	
2	4	String length (NNNN)	
3	1	TDD ID (NNN)	*13
4	4	Serial number (NNNN)	
5	6	Software-Version (0.0000)	
6	8	Date of the sensor (tt.mm.jj)	
7	8	Time of the sensor (on request) (hh:mm:ss)	
8	4	MES0	
9	2	5M SYNOP Tab.4677 (5 minutes mean value) (NN)	
10	2	5M SYNOP Tab.4680 (5 minutes mean value) (NN)	
11	5	5M METAR Tab.4678 (5 minutes mean value) (AAAAA)	
12	7	5M Intensity [mm/h] (5 minutes mean value) (NNN.NNN)	
13	2	1M SYNOP Tab.4677 (1-minute value) (NN)	
14	2	1M SYNOP Tab.4680 (1-minute value) (NN)	
15	5	1M METAR Tab.4678 (1-minute value) (AAAAA)	
16	7	1M Intensity [mm/h] total precipitation (1-minute value) (NNN.NNN)	
17	7	Corrected 1M Intensity [mm/h] total precipitation (1-minute value) (NNN.NNN)	*15
18	7	1M Precipitation amount [mm] (NNNN.NN)	
19	5	1M Visibility in precipitation [0...99999m] (1-minute value) (NNNNN)	*1
20	4	1M Radar reflectivity [-9.9...99.9dBZ] (1-minute value) (99.9)	*2
21	3	1M Measuring quality [0…100%] (1-minute value) (NNN)	*3

22	3	1M Maximum diameter hail [mm] (1-minute value) (N.N)	
23	5	CAM: Multiplication factor [%]	*10
24	2	False Positive information (NN)	*4
25	3	1M No. of False Positive Count (NNN)	*5
26	1	Extra Synop information (N)	*6
27	5	Water particle count (NNNNN)	*7
28	3	Interior temperature [°C] (NNN)	
29	3	Ambient temperature [°C] (NNN)	
30	4	Valid particle count (NNNN)	
31	4	Not matched particle count (NNNN)	
32	3	Circularity above 0.785 (NNN)	*8
33	3	Circularity between 0.7 and 0.785 (NNN)	*8
34	3	Circularity between 0.5 and 0.7 (NNN)	*8
35	3	Circularity between 0.0 and 0.5 (NNN)	*8
36	4	Depth class 1 (NNNN) (20cm – 22cm)	*9
37	4	Depth class 2 (NNNN) (22cm – 24cm)	*9
38	4	Depth class 3 (NNNN) (24cm – 26cm)	*9
39	4	Depth class 4 (NNNN) (26cm – 28cm)	*9
40	4	Depth class 5 (NNNN) (27cm – 30cm)	*9
41	4	Depth class 6 (NNNN) (30cm – 32cm)	*9
42	4	Depth class 7 (NNNN) (32cm – 34cm)	*9
43	4	Depth class 8 (NNNN) (34cm – 36cm)	*9
44	4	Depth class 9 (NNNN) (36cm – 38cm)	*9
45	4	Depth class 10 (NNNN) (38cm – 40cm)	*9
46	4	DDH0	
47	4	MAIN: V1 [V] (24.0 V)	*10
48	4	MAIN: V2 [V] (5.0 V)	*10
49	4	MAIN: V3 [V] (3.3 V)	*10
50	4	MAIN: Temperature Inside [°C]	*10
51	4	MAIN: Temperature Outside [°C]	*10
52	5	MAIN: Temperature SoC [°C]	*10
53	7	MAIN: Pressure [Pa]	*10
54	1	MAIN: Status Overall (OK:0, Error:1)	*10
55	4	LED: V1 [V] (40.0 V)	*10

56	4	LED: V2 [V] (12.0 V)	*10
57	4	LED: V3 [V] (3.3 V)	*10
58	4	LED: Temperature Board [°C]	*10
59	4	LED: Temperature Cover [°C]	*10
60	4	LED: Temperature Window [°C]	*10
61	4	LED: Temperature setpoint cover [°C]	*10
62	4	LED: Temperature setpoint window [°C]	*10
63	4	LED: Control value cover heating [LSB]	*10
64	4	LED: Control value window heating [LSB]	*10
65	1	LED: Status Overall (OK:0, Error:1)	*10
66	4	CAM: Temperature housing [°C]	*10
67	4	CAM: Temperature setpoint [°C]	*10
68	4	CAM: heating power [%]	*10
69	4	CAM: max. heating power [%]	*10
70	4	CAM: Control value housing heating [%]	*10
71	3	CAM: Clean lens left [%]	*10
72	3	CAM: Clean lens right [%]	*10
73	6	CAM: Multiplication factor [%]	*10
74	1	CAM: Status Overall (OK:0, Error:1)	*10
75	6	SD Card Space Availability [GB]	*10
76	1	Device Cleaning Flag	
77	4	DEH0	
78	1	MAIN: V1 out of the permissible range (permissible range: 18-40 V) (OK:0, Error:1)	*11
79	1	MAIN: V2 out of the permissible range (permissible range: 4.9-5.1 V) (OK:0, Error:1)	*11
80	1	MAIN: V3 out of the permissible range (permissible range: 3.2-3.4 V) (OK:0, Error:1)	*11
81	1	LED: V1 out of the permissible range (OK:0, Error:1)	*11
82	1	LED: V2 out of the permissible range (OK:0, Error:1)	*11
83	1	LED: V3 out of the permissible range (OK:0, Error:1)	*11
84	1	LED: Temperature of board to high (>55°C) (OK:0, Error:1)	*11
85	1	LED: Communication Fail 1 (Timeout) (OK:0, Error:1)	*11
86	1	LED: Communication Fail 2 (Checksum) (OK:0, Error:1)	*11
87	1	LED: Temperature sensor cover not in order (OK:0, Error:1)	*11

88	1	LED: IR-LEDs not in order (OK:0, Error:1)	*11
89	1	CAM: Temperature sensor not in order (OK:0, Error:1)	*11
90	1	CAM: housing temperature > 80 ° C (OK:0, Error:1)	*11
91	1	CAM: camera sensor failure (OK:0, Error:1)	*11
92	1	CAM: Communication Fail 1 (Timeout) (OK:0, Error:1)	*11
93	1	CAM: Communication Fail 2 (Checksum) (OK:0, Error:1)	*11
94	4	DWH0	
95	1	MAIN: Temperature SoC to high (> 90° C) (OK:0, Warning:1)	*12
96	1	MAIN: Pressure sensor not in order (OK:0, Warning:1)	*12
97	1	LED: Temperature sensor board not in order (OK:0, Warning:1)	*12
98	1	CAM: housing temperature > 50 ° C (OK:0, Warning:1)	*12
99	4	DSD0	
	User Defined	Diameter and speed (NNN) Precipitation spectrum (number of particles are corrected by their detection probability)	*16
	4	IMG0	*14
	2	TDD contains max. no. of Images (NN)	*14-1
	3	IM0…IMn (AAN)	*14-2
	2	Precipitation type (NN)	*14-3
	5	Diameter particle present in the image (NN.NN)	*14-4
	3	Rows (NNN)	*14-5
	3	Cols (NNN)	*14-6
		Image data	*14-7
	4	DDF0	
	7	MAIN[CAP_1]: Zähler Cachefehler	*8
	7	MAIN[CAP_1]: Zähler Queue-Leer	*8
	7	MAIN[CAP_1]: Zähler Queue-Voll	*8
	7	MAIN[CAP_1]: Zähler Sequenzfehler	*8
	7	MAIN[CAP_1]: Verarbeitungszeit Minimal	*8
	7	MAIN[CAP_1]: Verarbeitungszeit Maximal	*8
	7	MAIN[CAP_1]: Verarbeitungszeit Mittelwert	*8
	7	MAIN[CAP_1]: Zykluszeit Minimal	*8
	7	MAIN[CAP_1]: Zykluszeit Maximal	*8
	7	MAIN[CAP_1]: Zykluszeit Mittelwert	*8

	7	MAIN[CAP_2]: Zähler Cachefehler	*8
	7	MAIN[CAP_2]: Zähler Queue-Leer	*8
	7	MAIN[CAP_2]: Zähler Queue-Voll	*8
	7	MAIN[CAP_2]: Zähler Sequenzfehler	*8
	7	MAIN[CAP_2]: Verarbeitungszeit Minimal	*8
	7	MAIN[CAP_2]: Verarbeitungszeit Maximal	*8
	7	MAIN[CAP_2]: Verarbeitungszeit Mittelwert	*8
	7	MAIN[CAP_2]: Zykluszeit Minimal	*8
	7	MAIN[CAP_2]: Zykluszeit Maximal	*8
	7	MAIN[CAP_2]: Zykluszeit Mittelwert	*8
	7	MAIN[IMG_1]: Zähler Queue-Leer	*8
	7	MAIN[IMG_1]: Zähler Queue-Voll	*8
	7	MAIN[IMG_1]: Zähler Sequenzfehler	*8
	7	MAIN[IMG_1]: Verarbeitungszeit Minimal	*8
	7	MAIN[IMG_1]: Verarbeitungszeit Maximal	*8
	7	MAIN[IMG_1]: Verarbeitungszeit Mittelwert	*8
	7	MAIN[IMG_1]: Zykluszeit Minimal	*8
	7	MAIN[IMG_1]: Zykluszeit Maximal	*8
	7	MAIN[IMG_1]: Zykluszeit Mittelwert	*8
	7	MAIN[IMG_2]: Zähler Queue-Leer	*8
	7	MAIN[IMG_2]: Zähler Queue-Voll	*8
	7	MAIN[IMG_2]: Zähler Sequenzfehler	*8
	7	MAIN[IMG_2]: Verarbeitungszeit Minimal	*8
	7	MAIN[IMG_2]: Verarbeitungszeit Maximal	*8
	7	MAIN[IMG_2]: Verarbeitungszeit Mittelwert	*8
	7	MAIN[IMG_2]: Zykluszeit Minimal	*8
	7	MAIN[IMG_2]: Zykluszeit Maximal	*8
	7	MAIN[IMG_2]: Zykluszeit Mittelwert	*8
	7	MAIN[MAT]: Zähler Queue-Leer 1	*8
	7	MAIN[MAT]: Zähler Queue-Leer 2	*8
	7	MAIN[MAT]: Zähler Queue-Voll	*8
	7	MAIN[MAT]: Zähler Asynchronfehler	*8
	7	MAIN[MAT]: Verarbeitungszeit Minimal	*8
	7	MAIN[MAT]: Verarbeitungszeit Maximal	*8

	7	MAIN[MAT]: Verarbeitungszeit Mittelwert	*8
	7	MAIN[MAT]: Zykluszeit Minimal	*8
	7	MAIN[MAT]: Zykluszeit Maximal	*8
	7	MAIN[MAT]: Zykluszeit Mittelwert	*8
	7	MAIN[WRI]: Zähler Queue-Leer	*8
	7	MAIN[WRI]: Verarbeitungszeit Minimal	*8
	7	MAIN[WRI]: Verarbeitungszeit Maximal	*8
	7	MAIN[WRI]: Verarbeitungszeit Mittelwert	*8
	7	MAIN[WRI]: Zykluszeit Minimal	*8
	7	MAIN[WRI]: Zykluszeit Maximal	*8
	7	MAIN[WRI]: Zykluszeit Mittelwert	*8
	1	*	
	2	Checksum (AA) calculation according to NMEA 0183	
		CRLF	
		ETX (End identifier)	

Table 11: Description of TDD telegram.

*1 Not in use.

*2 Not in use.

*3 Measuring quality:

This value indicates the significance of the precipitation classification (parameter 13, 14 and 15). The device analyses for this value the quality of cleanness of both the cameras. It should be considered that other factors (e.g. wind speed, dense fog) can decrease the measuring quality provided by the instrument.

*4 Provides information regarding the false positive.

	Val	Description
Example:	1	May be particles/insects on camera lens (*When this situation frequently occurs, please clean the camera hood and LED screen*)
	2	May be a spider net or movement of insects/non-hydrometer particle through the measurement volume
	3	A spider net or movement of insects/non-hydrometer particle through the measurement volume

*5 Number of false positive detected during 1 minute of time.

*6 Provides extra information in parallel to the precipitation type.

	Val	Description
Example:	1	Graupel with Rain
	2	Snow with Rain
	3	Snow with Rain

*7 A number of particles found with a concentration of water.

*8 Internal data (raw values).

*9 This value provides information to the user regarding the distribution of particles in the context of depth. Sometimes, these depth class data are useful to identify the false positive.

Example:	Depth class 1 =	0
	Depth class 2 =	0
	Depth class 3 =	0
	Depth class 4 =	2
	Depth class 5 =	10
	Depth class 6 =	8
	Depth class 7 =	0
	Depth class 8 =	0
	Depth class 9 =	0
	Depth class 10 =	0

Based on the above depth class distribution, it is possible to get an idea of false positive by looking into each depth class. Particles have appeared only in depth classes 4, 5, and 6, which is non-uniform distribution.

*10 See also command “DD”, Section 6.4.

*11 See also command “DX”, Section 6.4.

*12 See also command “DX”, Section 6.4.

*13 See also command “TM” and “TR”.

*14 This field provide images of detected precipitation type.

*14-1: Max. number of images may available in the telegram.

*14-2: Image identifier.

*14-3: Precipitation type (see below).

*14-4: Particle diameter.

*14-5: No. of rows.

*14-6: No. of columns.

*14-7: Image data.

Example:

If max. image = 4

*14-1	4			
*14-2	IM1	IM2	IM3	IM4
*14-3	5	7	5	1
*14-4	0.8	1.2	1.1	3.1
*14-5	12	12	12	11
*14-6	11	12	12	12
*14-7	Image pixels value for IM1	Image pixels value for IM2	Image pixels value for IM3	Image pixels value for IM4

If max. image = 3

*14-1	4			
*14-2	IM1	IM2	IM3	
*14-3	5	7	5	
*14-4	0.8	1.2	1.1	
*14-5	12	12	12	
*14-6	11	12	12	
*14-7	Image pixels value for IM1	Image pixels value for IM2	Image pixels value for IM3	

*14-3 Precipitation type:

Value	Description
0	Reserved
1	False Positive
2	Rain or Graupel
3	Drizzle
4	Drizzle with Rain
5	Rain
6	Rain with Snow
7	Snow
8	Ice Prisms
9	Graupel
10	Hail

Table 12: Precioitation type information.

*15 The corrected intensity is calculated based on parameter CAM: Multiplication factor.

*16 Particle spectrum configuration (DSD). This section encapsulated all parameters for the particle spectrum output (distribution of the particles over the diameter and speed class binning).

Diameter class configuration:

The diameter classes were defined by start class width (x_start_class_width), start class index (x_start_class_index), class width doubling index delta (x_doubling_index_delta) and the number of classes (x_num_classes). The bin width can be increased for subsequent (greater) bins.

The max. value for the diameter is 40 mm. Every class limits will be clipped at this value!

For details see the corresponding parameters.

Example:

x_start_class_width: 2

x_start_class_index: 1

x_doubling_index_delta: 5

x_num_classes: 26

results in the following diameter class binning:

Start class width = x_start_class_width * 0.1 mm = 0.2 mm

First lower limit = x_start_class_index * Start class width = 0.2 mm

Class width(index) =

$$Start\ class\ width * 2^{\left\lceil \frac{index}{x\_doubling\_index\_delta} \right\rceil}$$

With $[x] := \max\{k \in Z \mid k \leq x\}$, Z is the set of integer numbers

Example: [1.3] = 1, [0.9] = 0, [2.5] = 2, [3.7] = 3, … etc.

Index	0	1	2	3	4	5	6	7	8	9	10	11	12	13	14
Lower limit (mm)	0.2	0.4	0.6	0.8	1.0	1.2	1.6	2.0	2.4	2.8	3.2	4.0	4.8	5.6	6.4
Class width (mm)	0.2					0.4					0.8				
Index	15	16	17	18	19	20	21	22	23	24	25				

Lower limit (mm)	7.2	8.8	10.4	12.0	13.4	15.2	18.4	21.6	24.8	28.0	31.2	
Class width (mm)	1.6					3.2					6.4	

x_start_class_width	Specifies the start width of the first diameter class bin. The width is specified as a factor of the minimal class bin width, which is **0.1 mm**. Therefore a value of 2 will result in a start class width of 0.2 mm. The minimal value for start width is 1. The term “start class width” results from the fact that the class bin width is increased by a factor of two at a fixed interval (see x_doubling_index_delta).
x_start_class_index	Specifies the start diameter class bin at which the spectrum will begin. All diameters smaller than this class will belong to this bin. The minimal value for start diameter class bin is 1
x_doubling_index_delta	Specifies the number of classes before doubling the class width. 0: disables class width doubling, equal class width for all classes. 1: doubled class width from class to class 2: doubled class width every second class etc.
x_num_classes	Specifies the total number of diameter classes

Velocity class configuration:

The velocity classes were defined by start class width (x_start_class_width), start class index (x_start_class_index), class width doubling index delta (x_doubling_index_delta) and the number of classes (x_num_classes). The bin width can be increased for subsequent (greater) bins.

The max. value for the diameter is 20 m/s. Every class limits will be clipped at this value!

For details see the corresponding parameters.

Example:

x_start_class_width: 2

x_start_class_index: 1

x_doubling_index_delta: 4

x_num_classes: 26

results in the following velocity class binning:

Start class width = x_start_class_width * 0.1 mm = 0.2 m/s

First lower limit = x_start_class_index * Start class width = 0.2 m/s

Class width(index) =

$$Start\ class\ width * 2^{\left\lfloor \frac{index}{x\_doubling\_index\_delta} \right\rfloor}$$

With $[x] := \max\{k \in Z \mid k \leq x\}$, Z is the set of integer numbers

Example: [1.3] = 1, [0.9] = 0, [2.5] = 2, [3.7] = 3, … etc.

Index	0	1	2	3	4	5	6	7	8	9	10	11
Lower limit (mm)	0.0	0.2	0.4	0.6	1.0	1.4	1.5	2.2	2.6	3.4	4.2	5.0
Class width (mm)	0.2				0.4				0.8			
Index	12	13	14	15	16	17	18	19				
Lower limit (mm)	5.8	7.4	9.0	10.6	12.2	15.4	18.6	2.0				
Class width (mm)	1.6				3.2				6.4			

x_start_class_width	Specifies the start width of the first velocity class bin. The width is specified as a factor of the minimal class bin width, which is **0.1 m/s**. Therefore a value of 2 will result in a start class width of 0.2 m/s. The minimal value for start width is 1. The term “start class width” results from the fact that the class bin width is increased by a factor of two at a fixed interval (see x_doubling_index_delta).
x_start_class_index	Specifies the start velocity class bin at which the spectrum will begin. All velocity smaller than this class will belong to this bin. The minimal value for start velocity class bin is 1
x_doubling_index_delta	Specifies the number of classes before doubling the class width.

	0: disables class width doubling, equal class width for all classes. 1: doubled class width from class to class 2: doubled class width every second class etc.
x_num_classes	Specifies the total number of velocity classes

6.5.1.1 List of Telegrams

See command “TM”, “TN”, “TP”, “TQ” and “TR” for setting the Telegram ID.

In **Error! Reference source not found.**, “0” represents data of particular filed will not be t ransmitted via telegram and “1” represents data of particular filed will be transmitted via telegram.

Telegram ID	DDH0	DEH0	DWH0	DSD0	IMG0	DDF0
100	0	0	0	0	0	0
101	1	0	0	0	0	0
102	0	1	0	0	0	0
103	1	1	0	0	0	0
104	0	0	1	0	0	0
105	1	0	1	0	0	0
106	0	1	1	0	0	0
107	1	1	1	0	0	0
108	0	0	0	1	0	0
109	1	0	0	1	0	0
110	0	1	0	1	0	0
111	1	1	0	1	0	0
112	0	0	1	1	0	0
113	1	0	1	1	0	0
114	0	1	1	1	0	0
115	1	1	1	1	0	0
116	0	0	0	0	1	0
117	1	0	0	0	1	0
118	0	1	0	0	1	0
119	1	1	0	0	1	0
120	0	0	1	0	1	0

121	1	0	1	0	1	0
122	0	1	1	0	1	0
123	1	1	1	0	1	0
124	0	0	0	1	1	0
125	1	0	0	1	1	0
126	0	1	0	1	1	0
127	1	1	0	1	1	0
128	0	0	1	1	1	0
129	1	0	1	1	1	0
130	0	1	1	1	1	0
131	1	1	1	1	1	0
132	0	0	0	0	0	1
133	1	0	0	0	0	1
134	0	1	0	0	0	1
135	1	1	0	0	0	1
136	0	0	1	0	0	1
137	1	0	1	0	0	1
138	0	1	1	0	0	1
139	1	1	1	0	0	1
140	0	0	0	1	0	1
141	1	0	0	1	0	1
142	0	1	0	1	0	1
143	1	1	0	1	0	1
144	0	0	1	1	0	1
145	1	0	1	1	0	1
146	0	1	1	1	0	1
147	1	1	1	1	0	1
148	0	0	0	0	1	1
149	1	0	0	0	1	1
150	0	1	0	0	1	1
151	1	1	0	0	1	1
152	0	0	1	0	1	1
153	1	0	1	0	1	1
154	0	1	1	0	1	1

155	1	1	1	0	1	1
156	0	0	0	1	1	1
157	1	0	0	1	1	1
158	0	1	0	1	1	1
159	1	1	0	1	1	1
160	0	0	1	1	1	1
161	1	0	1	1	1	1
162	0	1	1	1	1	1
163	1	1	1	1	1	1

Table 13: List of Telegrams.

Telegram Fields:

DDH0: See command “DD”. Section 6.4.

DEH0: See command “DX”. Section 6.4.

DWH0: See command “DX”. Section 6.4.

DSD0: The particle spectrum are raw data.

IMG0: Contain images of detected precipitation type (See *14).

DDF0: Internal data (raw values).

Type of Precipitation	**Internal**	**SYNOP Ww Tab.4677**	**SYNOP Ww Tab.4678**	**SYNOP Ww Tab.4680**
Sensor error	0	-1 *	????? **	-1 *
No precipitation	1	00	NP	00
Precipitation (not identified ****)	2	-2.-3.-4 *	-UP,UP,+UP	41,41,42
Drizzle (also freezing ***)	3	51,53,55	-DZ,DZ,+DZ	51,52,53
Freezing drizzle (see drizzle ***)		[56,57,57] 51,53,55	[FZDZ] -DZ,DZ,+DZ	[54,55,56] 51,52,53
Drizzle with Rain (also freezing ***)	4	58,59,59	-RADZ, RADZ, +RADZ	57,58,58
Rain (also freezing ***)	5	61,63,65	-RA,RA,+RA	61,62,63
Freezing rain (see rain ***)		[66,67,67] 61,63,65	[FZRA] -RA,RA,+RA	[64,65,66] 61,62,63

Rain and/or drizzle with snow	6	68,69,69	-RASN, RASN,+ RASN	67,68,68
Snow	7	71,73,75	-SN,SN,+SN	71,72,73
Ice pallets (see soft hail ***)	9	[79] 87,88,88	[PE/PL] GS	74,75,76
Snow grains (also ice prisms ***)	8	77	-SG,SG,+SG	77
Ice crystals / -needles (see snow grains ***)		[76] 77	[IC] SG	[78] 77
Soft hail (also ice pattets ***)	9	87,88,88	-GS,GS,+GS	74,75,76
Hail	10	89,90,90	GR	89

Table 14: Code table SYNOP/METER.

* Code comply not with WMO SYNOP code (FORM OF MESSAGE FM12)

Code table 4677 or 4680

** Code comply not with WMO SYNOP code (FORM OF MESSAGE FM15) code table 4678.

*** Definitions of table 4677/4678/4680 were not meet by liquid precipitation (determination freezing/not freezing), determination soft/ice pellets and snow grains/ice prism.

**** if this precipitation type is often detected, the sensor should be cleaned. Normally natural reason (e.g. spider web) are responsible for this behaviour. This report should be managed as a error, therefore we recommend to not use this precipitation type and the intensity. In the same way the precipitation type drizzle and snow grains should not observed until the disturbance is eliminated, because they could be erroneous

[…] Not identifiable/reference value i.e. code in brackets will be not transmitted.

Additional hints:

- The code tables for SYNOP and METER are described in the 506-sided WMO document number 306 (WMO-No.360 “Manual on Codes” Vol. I.1, 2010 edition).
- The coding is done according the WMO* and ICAO** guidelines in the precipitation type and the intensity step (See the following Table).
- Example:

  Sensor detects drizzle with 0.22mm/h intensity.

  Output code:

Code table	Intensity step	Coding
SYNOP Tab.4677	Moderate	53
SYNOP Tab.4680		52

METER Tab.4678		DZ

Intensity [mm/h]	Slight	Moderate	Heavy
Drizzle	< 0.1	0.1 … < 0.5	>=0.5
Rain, drizzle with rain, unknown precipitation	< 2.5	2.5 … < 10.0	>= 10.0
Snow, Rain with snow, Snow grains, Ice pellets / soft hail	< 1.0	1.0 … < 5.0	>= 5.0
Hail (only Tab.4677)	< 2.5	>= 2.5	

* : Guide to Meteorological Instruments and Methods of Observation, WMO-No.8 Ed2008 Part1 Ch14 Up2010

** : Manual on Automatic Meteorological Observing System at Aerodromes, Second Edition 2011, Doc 9837 AN/454.

6.5.2 LNM compatible telegram

The LNM compatible telegram contains precipitation information and diameter speed distribution according to LNM telegram 5 (5.4110.xx.xxx). When automatic telegram mode is set to 5 (see Section 6.4), a LNM compatible telegram is generated and sent/saved.

The folder and name conventions are the following:

- Folder: /media/sd/YYYY/MM/DD/hh/
- File name: YYYYMMDDThhmmsstdd.dat
- T: separator

The data line format is the following:

- List separator: Semicolon (;)
- Decimal separator: Point (.)
- Start of the telegram: STX
- End of the telegram: CR(13), LF(10), ETX(03) (carriage return, line feed, EXT)
- Fixed length telegram.
- Error code/data not available: Output of the greatest presentable number (e.g. “99.9”).

This telegram can be visualized with the LNM View software (9.1700.99.000). This can be accomplished in two ways:

- Offline: Import telegram files from SD card and convert it with LNM View File converter
- Online: Setup 3D Disdrometer as physical 3D-disdro device with serial or ethernet connection in LNM View software

For a detailed description of the necessary steps see the instructions for use of LNM View.

The LNM compatible telegram is only a subset of the LNM telegram 5.

Example telegram **5**:

The following table shows the differences between the telegrams:

No.	Column	Len	Description LNM	Description 3D-Disdrometer
1	1	1	STX (start identifier)	
2	2-3	2	Device address (factory setting „00“) (NN)	unused
3	5-8	4	Serial number (NNNN)	unused
4	10-13	5	Software-Version (N.NN)	“2.03” (for compatibility reasons)
5	15-22	8	Date of the sensor (tt.mm.jj)	Date of the sensor (tt.mm.jj)
6	24-31	8	Time of the sensor (on request) (hh:mm:ss)	Time of the sensor (on request) (hh:mm:ss)
7	33-34	2	5M SYNOP Tab.4677 (5 minutes mean value) (NN)	unused
8	36-37	2	5M SYNOP Tab.4680 (5 minutes mean value) (NN)	unused
9	39-43	5	5M METAR Tab.4678 (5 minutes mean value) (AAAAA)	unused
10	45-51	7	5M Intensität [mm/h] (5 minutes mean value) (NNN.NNN)	unused
11	53-54	2	1M SYNOP Tab.4677 (1-minute value) (NN)	unused
12	56-57	2	1M SYNOP Tab.4680 (1-minute value) (NN)	1M SYNOP Tab.4680 (1 minute value) (NN)
13	59-63	5	1M METAR Tab.4678 (1-minute value) (AAAAA)	unused
14	65-71	7	1M Intensity [mm/h] total precipitation (1-minute value) (NNN.NNN)	Precipitation in z-Direction
15	73-79	7	1M Intensity [mm/h] liquid precipitation (1-minute value) (NNN.NNN)	Precipitation in z-Direction
16	81-87	7	1M Intensity [mm/h] solid precipitation (1-minute value) (NNN.NNN)	unused
17	89-95	7	Precipitation amount [mm] (Reset with command „RA“) (NNNN.NN)	Precipitation amount in z-Direction (command “RA” not available)
18	97-101	5	1M Visibility in precipitation [0...99999m] (1 minute value) (NNNNN)	unused

19	103-106	4	1M Radar reflectivity [-9.9...99.9dBZ] (1 minute value) (NN.N)	unused
20	108-110	3	1M Measuring quality [0...100%] (1 minute value) (NNN)	unused
21	112-114	3	1M Maximum diameter hail [mm] (1 minute value) (N.N))	unused
22	116	1	Status Laser (OK/on:0, off:1)	unused
23	118	1	Static signal (OK:0, Error:1)	unused
24	120	1	Status Laser temperature (analogue) (OK:0, Error:1)	unused
25	122	1	Status Laser temperature (digital) (OK:0, Error:1)	unused
26	124	1	Status Laser current (analogue) (OK:0, Error:1)	unused
27	126	1	Status Laser current (digital) (OK:0, Error:1)	unused
28	128	1	Status Sensor supply (OK:0, Error:1)	unused
29	130	1	Status Current pane heating laser head (OK:0, warning:1)	unused
30	132	1	Status Current pane heating receiver head (OK:0, warning:1)	unused
31	134	1	Status Temperature sensor (OK:0, warning:1)	unused
32	136	1	Status Heating supply (OK:0, warning:1)	unused
33	138	1	Status Current heating housing (OK:0, warning:1)	unused
34	140	1	Status Current heating heads (OK:0, warning:1)	unused
35	142	1	Status Current heating carriers (OK:0, warning:1)	unused
36	144	1	Status Control output laser power (OK:0, warning:1)	unused
37	146	1	Reserve Status (0)	unused
38	148-150	3	Interior temperature [°C] (NNN)	Interior temperature
39	152-153	2	Temperature of laser driver 0-80°C (NN)	unused
40	155-158	4	Mean value laser current [1/100 mA] (NNNN)	unused

41	160-163	4	Control voltage [mV] (reference value: 4010±5) (NNNN)	unused
42	165-168	4	Optical control output [mV] (2300 … 6500) (NNNN)	unused
43	170-172	3	Voltage sensor supply [1/10V] (NNN)	unused
44	174-176	3	Current pane heating laser head [mA] (NNN)	unused
45	178-180	3	Current pane heating receiver head [mA] (NNN)	unused
46	182-186	5	Ambient temperature [°C] (NNN.N)	Ambient temperature
47	188-190	3	Voltage Heating supply [1/10 V] (only 5.4110.x1.xxx, otherwise “999”) (NNN)	unused
48	192-195	4	Current heating housing [mA] (only 5.4110.x1.xxx, otherwise “9999”) (NNNN)	unused
49	197-200	4	Current heating heads [mA] (only 5.4110.x1.xxx, otherwise “9999”) (NNNN)	unused
50	202-205	4	Current heating carriers [mA] (only 5.4110.x1.xxx, otherwise “9999”) (NNNN)	unused
51	207-211	5	Number of all measured particles (NNNNN)	Number of all measured particles (not corrected by detection probability)
52	213-221	9	„00000.000“ (internal data)	unused
53	223-227	5	Number of particles < minimal speed (0.15m/s) (NNNNN)	unused
54	229-237	9	„00000.000“ (internal data)	unused
55	239-243	5	Number of particles > maximal speed (20m/s) (NNNNN)	unused
56	245-253	9	„00000.000“ (internal data)	unused
57	255-259	5	Number of particles < minimal diameter (0.15mm) (NNNNN)	unused
58	261-269	9	„00000.000“ (internal data)	unused
59	271-275	5	Number of particles no hydrometeor	unused
60	277-285	9	Total volume (gross) of this class	unused
61	287-291	5	Number of particles with unknown classification	unused
62	293-301	9	Total volume (gross) of this class	unused
63	303-307	5	Number of particles class 1	unused
64	309-317	9	Total volume (gross) of class 1	unused

65	319-323	5	Number of particles class 2	unused
66	325-333	9	Total volume (gross) of class 2	unused
67	335-339	5	Number of particles class 3	unused
68	341-349	9	Total volume (gross) of class 3	unused
69	351-355	5	Number of particles class 4	unused
70	357-365	9	Total volume (gross) of class 4	unused
71	367-371	5	Number of particles class 5	unused
72	373-381	9	Total volume (gross) of class 5	unused
73	383-387	5	Number of particles class 6	unused
74	389-397	9	Total volume (gross) of class 6	unused
75	399-403	5	Number of particles class 7	unused
76	405-413	9	Total volume (gross) of class 7	unused
77	415-419	5	Number of particles class 8	unused
78	421-429	9	Total volume (gross) of class 8	unused
79	431-435	5	Number of particles class 9	unused
80	437-445	9	Total volume (gross) of class 9	unused
81	447-449	3	From here (447) to the end(2205): precipitation spectrum (distrometer data) (NNN) Number of particles 0.125mm<diameter <0.25mm and speed <0.2m/s	Precipitation spectrum (number of particles are corrected by their detection probability)
...	....	3	Remaining 439 classes (first all speeds, then the next diameter class) Diameter and speed (NNN)	Precipitation spectrum (number of particles are corrected by their detection probability)
520	2203-2205	3		
521	2207-2208	2	Checksum (AA)	
522	2210-2211	2	CRLF	
523	2212	1	ETX (End identifier)	

Table 15: Description of LNM compatible telegram and its difference with the TDD telegram.

7 Maintenance

As the instrument does not have moving parts, i.e. is not subject to wear during operation, only minimal servicing is required. Given that the sensor surfaces are normally kept clean by rain, it will only be necessary to occasionally remove residues from the camera filter and lamps surfaces. Cleaning can be carried out as required using non-aggressive cleaning agents in water and a soft cloth during routine checks.

Attention:
During storage, installation, de-installation, transport or maintenance it must be ensured that no water gets into the system.

8 Calibration

A calibration is necessary with the replacement of certain components. It is carried out in the factory at A. Thies GmbH & Co KG.

Important:
Mechanical deformation of the measuring arms results in errors in the measured values, which involve the output of error telegrams / error signals to the analog interfaces.

9 Warranty

Damage caused by improper handling or external influences, e.g. lightning, does not fall under the warranty provisions. The warranty entitlement expires if the instrument is opened (exempt user interface opening).

Important:
The instrument must be returned in the original packaging as the warranty entitlement otherwise expires.

10 Technical data

General:			
Ambient conditions	-40... +50 °C, 0... 100% r.h.		
Dimensions	0.24 x 0.39 x 0.72 m (9.5 x 15.4 x 28.4 inch)		
Housing electronics and LEDs	Aluminium die-casting, varnished		
Housing cameras	Aluminium die-casting, varnished		
Protection	IP65		
EMC Immunity Radiation	Not tested yet		
Mounting	Mast mounting (∅ 48... 102mm, 1.9... 4 inch) Stainless steel		
Power supply:			
5.4120.00.000: Supply voltage: AC / DC current (max):	24 VAC +15% -15% / 20...30 VDC 1A		
5.4120.01.000: Supply voltage: AC / DC current (max):	24 VAC +15% -15% / 20...30 VDC 5.2A		
5.4120.10.000: Supply voltage: Frequency range: AC current (max): AC inrush current	85~264 VAC, 120~370 VDC 47~63 Hz 1.6 A / 115 VAC, 0.8 A / 230 VAC Cold Start 45 A / 230 VAC		
5.4120.11.000: Supply voltage: Frequency range: AC current (max): AC inrush current	85~264 VAC, 120~370 VDC 47~63 Hz 0.4 A / 115 VAC, 0.2 A / 230 VAC Cold Start 45 A / 230 VAC		
Heating:			
	Camera housing	LED housing	Camera arm
5.4120.00.000		None	None

5.4120.01.000	100 W	75 W	50 W
5.4120.10.000		None	None
5.4120.11.000		75 W	50 W
Detector: **Emitter:** Measurement base area: Pressure sensor: Ambient temperature sensor:	752x480 px, 8 bit, max. 58 fps, day light filter (< 830 nm) 32 LEDs, 850 nm, classified by VDE as exempt group ca. 100 cm² (instrument-specific) 300 ... 1100 hPa (+/-6 hPa) (+9000 m to -500 m relating to sea level) Pt100, -40... +80 °C, +- 0.2 K		
Electronics for evaluation:			
Processing system	Xilinx Zynq™-7000 AP SoC (Dual ARM® Cortex®-A9 with FPGA fabric)		
RAM-memory	1 GB		
Flash-memory	4 GB		
Data output:			
SD card	Type: SD (2 GB), SDHC (max. 32 GB) Format: fat32, ext2		
Ethernet	10 / 100 / 1000 Mbit/s (10 / 100 / 1000BASE-T)		
Console (UART1) (only for maintenance purposes)	RS232: 115200 baud, 1 start bit, 8 data bits, 1 stop bit, no parity, no flow control		
Serial Port 1 (COM1)	RS485 Full Duplex: • Data parameter configurable • Potential isolation up to 1KV • termination resistor (220 Ω), pull up/down (1 KΩ), switchable		
Serial Port 2 (COM2)	RS485 Half Duplex: • Data parameter configurable • Potential isolation up to 1KV • termination resistor (220 Ω), pull up/down (1 KΩ), switchable		
Digital output (currently NOT used)	2 Optocouplers: • max. 24 VDC, max. 1 mA • Potential isolation up to 1 KV		

11 GNU GPL Code Statement

The software included in this device/product contains copyrighted software that is licensed under the GNU General Public License (“GPL”) or GNU Lesser General Public License (“LGPL”). Please see the GNU GPL and LGPL for the exact terms and conditions of the licenses.

11.1 GNU GPL and LGPL written offer

Adolf Thies GmbH & Co KG hereby offers to deliver or make available, upon request, for a charge no more than the cost of physically performing source distribution, a complete machine-readable copy of the applicable GPL and LGPL source code on a medium customarily used for software interchange.

Please direct all inquiries to:

Adolf Thies GmbH & Co KG

Hauptstr. 76

37083 Göttingen.

This offer is valid for a period of three years after the date of purchase of this product.

[1] GPL v2 http://www.gnu.de/documents/gpl-2.0.en.html
GPL v3: http://www.gnu.de/documents/gpl-3.0.en.html

[1] LGPL v2.1: http://www.gnu.de/documents/lgpl-2.1.en.html
LGPL v3 http://www.gnu.de/documents/lgpl-3.0.en.html

12 Dimension Drawing

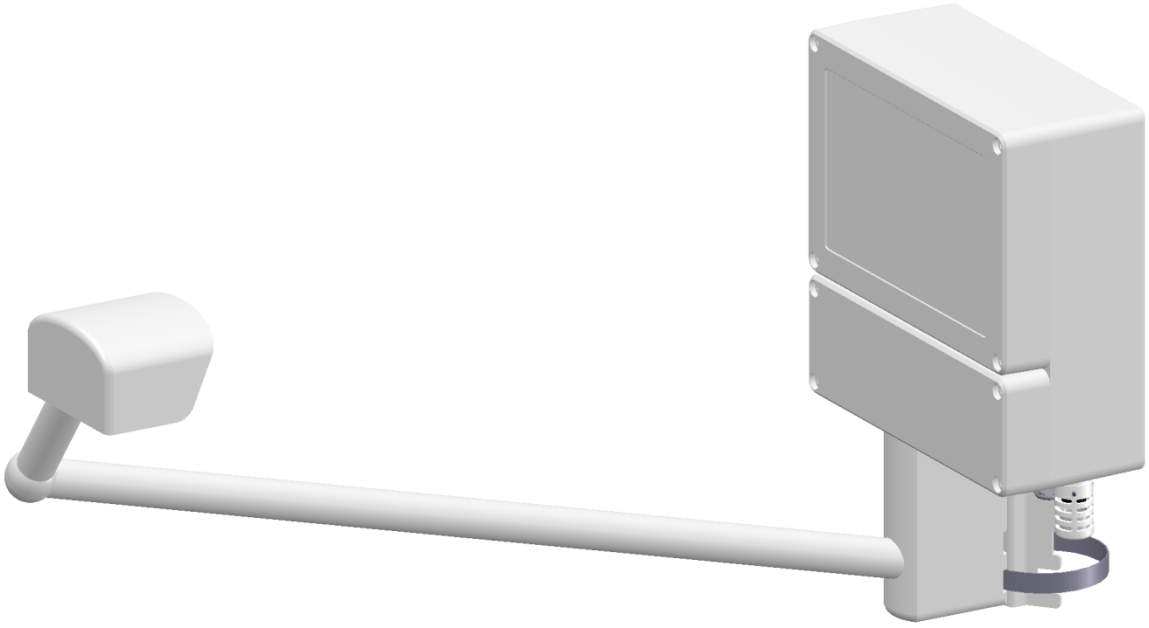

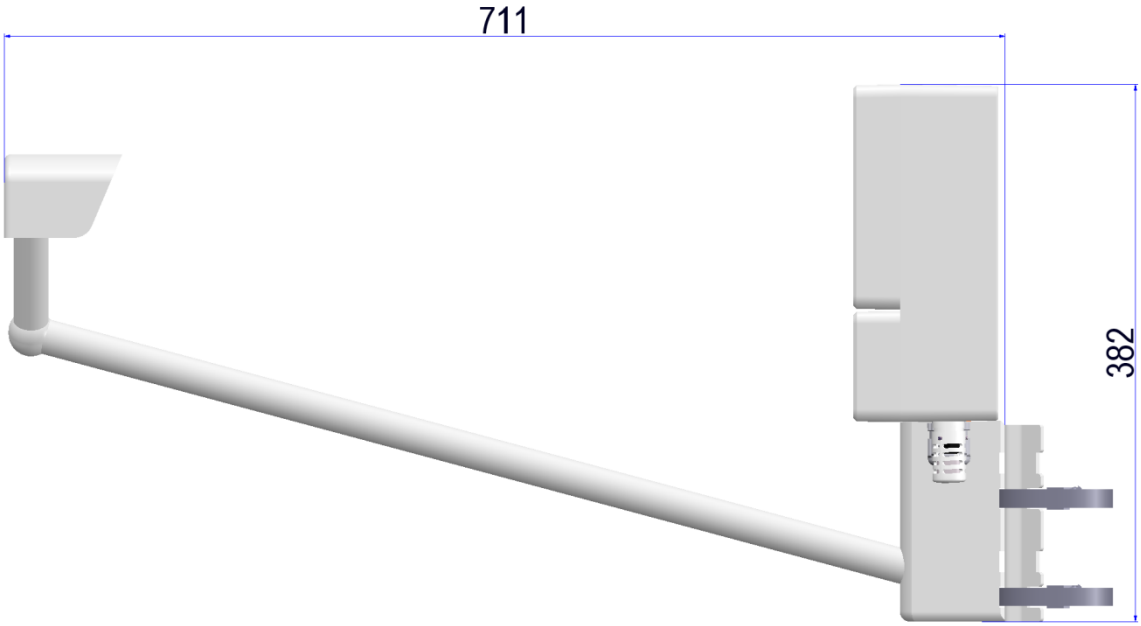

Figure 9: Dimensional drawing.

13 EC-Declaration of Conformity

Attention: The instrument is a protoype without EC-Declaration of Conformity.

Please contact us for your system requirements.
We advise you gladly.

ADOLF THIES GMBH & CO. KG
Meteorology and environmental metrology
Hauptstraße 76 · 37083 Göttingen · Germany
Phone +49 551 79001-0 · Fax +49 551 79001-65
info@thiesclima.com

www.thiesclima.com