THE WORLD OF WEATHER DATA - THE WORLD OF WEATHER DATA - THE WORLD OF WEATHER DATA

Instruction for Use

021272/10/06

Small Wind Transmitter

4.3515.5x.x61

ADOLF THIES GmbH & Co. KG

Hauptstraße 76 37083 Göttingen Germany
Box 3536 + 3541 37025 Göttingen
Phone ++551 79001-0 Fax ++551 79001-65
www.thiesclima.com info@thiesclima.com

Contents

1 Models available

Order-No.	Meas. range	Electrical Output	Heating	Connection	Housing-colour
4.3515.50.061	0.8 ... 40 m/s	0 – 10V	yes	3 m cable LiYCY 6 x 0.25 mm²	white
4.3515.50.161	0.8 ... 40 m/s	0 – 10V	yes	3 m cable LiYCY 6 x 0.25 mm²	black
4.3515.51.061	0.8 … 40 m/s	0 – 10V	no	3 m cable l LiYCY 4 x 0.25 mm²	white
4.3515.51.161	0.8 … 40 m/s	0 – 10V	no	3 m cable LiYCY 4 x 0.25 mm²	black
4.3515.51.361	0.8 … 40 m/s	0 – 10V	no	12 m cable LiYCY 4 x 0.25 mm²	white
4.3515.51.961	0.8 … 40 m/s	0 – 10V	no	10 m cable LiYCY 4 x 0.25 mm²	black

2 Application

The small wind transmitter is designed for the acquisition of the horizontal wind direction. The measuring value is output as electrical analogue signal. The measuring data available are ideally adapted to the supply in display instruments, recording instruments, datalogger, as well as process control systems.

For trouble-free winter operation the instrument is optionally equipped with a heating (PTC-heating element).

3 Construction and Mode of Operation

The outer parts of the instrument are made of plastic, the mounting angle is made of stainless steel. Labyrinth gaskets protect the parts inside the instrument against precipitation.

The cup star is set into rotation by the wind. An axis, running in friction bearings, is fixed at the cup star, and leads to magnets through a Reed-contact. The pulses thus produced are transformed, by means of a pulse-voltage-converter, into an output voltage which is proportional to the wind speed.

4 Recommendation Side Selection/ Standard Installation

In general wind measurement instruments should be able to detect the wind conditions of a large area. In order to obtain comparable values when determining the surface wind, measurements should be taken at a height of 10 meters over an even unobstructed area. An unobstructed area means that the distance between the wind transmitter and an obstacle should be at least 10 times the height of the obstacle (s. VDI 3786). If it is not possible to fulfil this condition, then the wind transmitter should be set up a height where local obstacles do not influence the measured values to any significant extent (approx. 6-10 m above the obstacle).

The wind transmitter should be set up in the centre of flat roofs and not on the roof side in order to avoid bias in the direction (privileged directions).

5 Installation

Remark:
When using fastening adapters (angle, traverses, brackets etc.) please take a possible effect by turbulences into consideration.

Attention:
Storing, mounting and operation under weather conditions is permissible only in vertical position, as otherwise water can get into the instrument.

5.1 Mechanical Mounting

The wind transmitter is screwed onto a traverse, a mast etc. by means of a mounting angle. The cable is fixed tightly, for ex., onto the traverse, by means of clamps, cable ties, or similar fastenings.

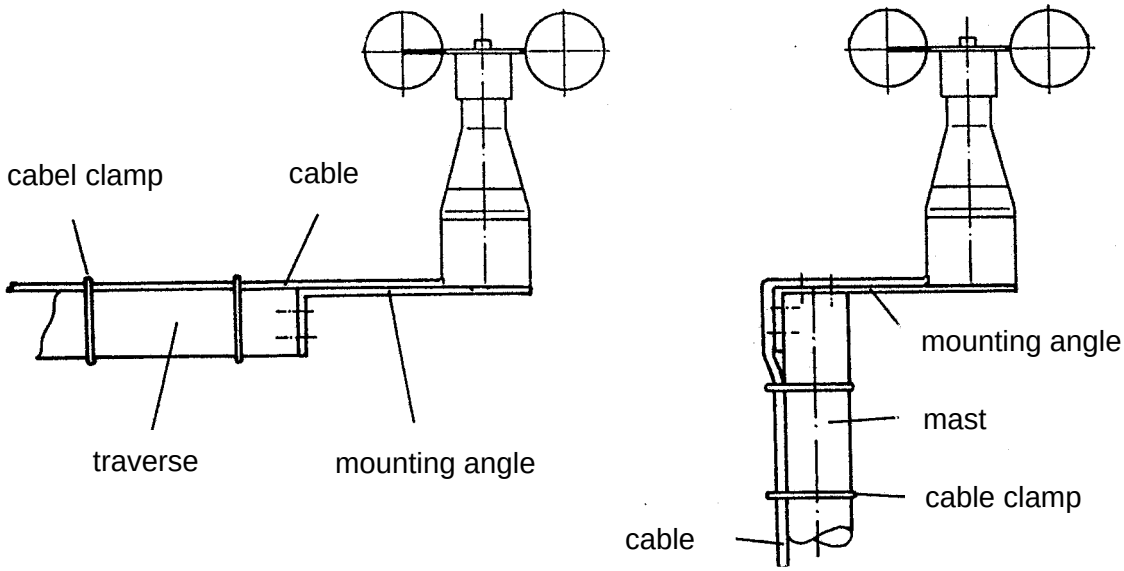

5.2 Electrical Mounting

The electrical connection is carried out acc. to the connection diagram (chapter 7).

6 Maintenance

After proper mounting the instruments works maintenance-free.
Heavy pollution can clog up the slit between the rotating and the stationary parts of the wind transmitter. This slit must be kept clean

7 Connection Diagram

Order – No.

4.3515.50.061
4.3515.50.161
4.3515.51.061*
4.3515.51.161*
4.3515.51.361*
4.3515.51.961*

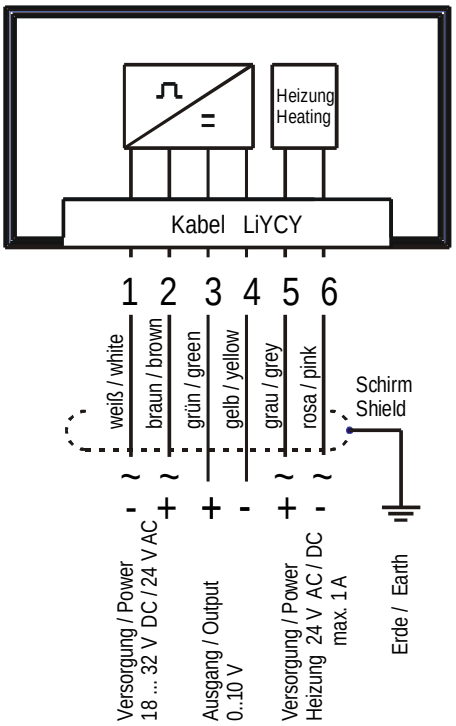

* the small wind transmitter w/o heating is dispensed with 5 + 6

8 Technical Data

Measuring range	0.8 ... 40 m/s
Electrical output	0 ... 10 V (= 0 ... 40 m/s)
Supply voltage	18 ... 32 V DC / 24 V AC
Current consumption	6 ... 12 mA
Max. output current	8 mA
Residual ripple	0,6 % of accumulated output value
Response time	1.1 s
Measuring system	Reed contact, magnet
Load	max. 60 m/s for a short time
Heating	24 V AC / DC (80 °C)
Switch-on current	max. 1 A
Ambient temperature	- 25 °C ... + 60 °C (with ice-free condition)
Material	Plastic ABS
Connection	See models available
Dimensions	See dimension diagram
Weight	approx. 0.3 – 0.7 kg

9 Dimension diagram

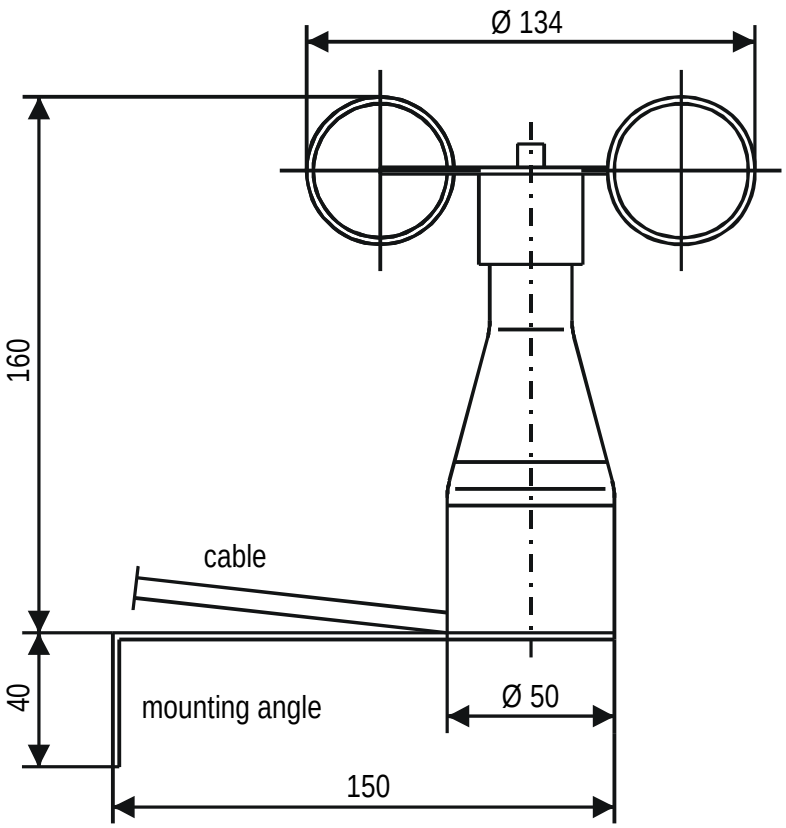

10 EC-Declaration of Conformity

Document-No.: **000410** Month: 06 Year: 08

Manufacturer: **A D O L F T H I E S G m b H & C o. K G**

Hauptstr. 76
D-37083 Göttingen
Tel.: (0551) 79001-0
Fax: (0551) 79001-65
email: Info@ThiesClima.com

Description of Product: **Small Wind Transmitter, Photo Wind Transmitter**

Article No.				
	4.3400.30.000	**4.3515.30.000**	**4.3515.30.000A**	**4.3515.30.001**
	4.3515.30.002	**4.3515.30.030**	**4.3515.30.036**	**4.3515.30.900**
	4.3515.50.000	**4.3515.50.061**	**4.3515.50.100**	**4.3515.50.161**
	4.3515.51.000	**4.3515.51.061**	**4.3515.51.100**	**4.3515.51.110**
	4.3515.51.161	**4.3515.51.361**	**4.3515.51.961**	**4.3515.61.100**
	4.3517.30.000	**4.3517.30.010**	**4.3517.30.020**	**4.3517.31.000**
	4.3517.51.000	**4.3517.60.010**	**4.3517.71.000**	**4.3711.30.000**

specified technical data in the document: **020917/02/97; 020760/08/04; 020743/04/08; 021125/10/06; 021543/08/07**

The indicated products correspond to the essential requirement of the following European Directives and Regulations:

2004/108/EC DIRECTIVE 2004/108/EC OF THE EUROPEAN PARLIAMENT AND OF THE COUNCIL of 15 December 2004 on the approximation of the laws of the Member States relating to electromagnetic compatibility and repealing Directive 89/336/EEC

2006/95/EC DIRECTIVE 2006/95/EC OF THE EUROPEAN PARLIAMENT AND OF THE COUNCIL of 12 December 2006 on the harmonisation of the laws of Member States relating to electrical equipment designed for use within certain voltage limits

552/2004/EC Regulation (EC) No 552/2004 of the European Parliament and the Council of 10 March 2004 on the interoperability of the European Air Traffic Management network (the interoperability Regulation)

The indicated products comply with the regulations of the directives. This is proved by the compliance with the following standards:

Reference number	Specification
IEC 61000-6-2: 2005	Electromagnetic compatibility Immunity for industrial environment
IEC 61000-6-3: 2006	Electromagnetic compatibility Emission standard for residential, commercial and light industrial environments
IEC 61010-1: 2001	Safety requirements for electrical equipment for measurement, control and laboratory use. Part 1: General requirements

Place: Göttingen Date: 30.06.2008

Legally binding signature: issuer:

.....
Wolfgang Behrens, General Manager

.....
Joachim Beinhorn, Development Manager

This declaration certificates the compliance with the mentioned directives, however does not include any warranty of characteristics.
Please pay attention to the security advises of the provided instructions for use.

ADOLF THIES GmbH & Co. KG
Hauptstraße 76 37083 Göttingen Germany
P.O. Box 3536 + 3541 37025 Göttingen
Phone ++551 79001-0 Fax ++551 79001-65
www.thiesclima.com info@thiesclima.com

- Alterations reserved -